

IES 14.33

Installation Manual

Content

Technical Data 4

Datasheet 4

Product Overview 5

LED Indicator Definition 7

LED Indicator Instructions 7

Charging Battery Level Indicators Instructions 7

Discharging Battery Level Indicators Instructions 8

Protection Fault Indicators Instructions 8

CAN / RS485 Port 9

RS232 Port 9

Installation Guide 9

Checking Before Installation 9

Checking Outer Packing Materials 9

Tools 11

Installation Requirements 11

Installation Instructions 12

Dimensions 12

Installation Procedure 13

Maintenance 20

Recharge Requirement During Normal Storage 20

Recharge Requirement When Over Discharge 20



More Usable Energy

Deep cycle DOD control

Easy Installation

Floor standing or wall mounted

Scalable Design

Up to 15 units in parallel

Safe & Reliable

Cobalt Free Lithium Iron Phosphate (LFP) 8000 Cycles

Quick Commissioning

One button ON/OFF
Automatic ID assignment

Perfect Compatibility

Compatible with leading PCS brands

Technical Data

Note: Operating current derating according to the cell voltages and battery temperatures.

Datasheet

Model	IES 14.33
Cell Technology	LPF (LiFePO4)
Battery Usable Energy [1]	14.33 kWh
Nominal Voltage	51.2 V
Operating Voltage	44.8 V - 56.8 V
Max. Charge & Discharge Current	280 A
COMMUNICATION	
Display	SOC Status Indicator, LED Indicator
Communication	CAN / RS485 / RS232 / Wi-Fi
GENERAL SPECIFICATION	
Dimension (W×D×H)	700 × 250 × 758.5 mm | 27.5 × 9.8 × 29.8 inch
Weight	141 kg (310.85 lbs)
Installation	Floor Standing r Wall Mounted
Operating Temperature [3]	Charge: 0°C to 55°C (32°F to 131°F) Discharge: -20°C to 55°C (-4°F to 131°F)
Environmental Humidity	≤ 95%RH (No Condensation)
Ingress Protection Rating	IP20
Cycle life [4]	8 000 Cycles or Ten (10) Years @ 80% DOD / 25°C / 0.5C, 70% EOL
Scalability	Max 15 Batteries in Parallel
Application	On Grid / On Grid + Backup / Off Grid
Compatible Inverters	Deye, Sunsynk, Victron, Solplanet, Sunways, Lux Power and Solis
STANDARD COMPLIANCE	
Compliance	UN38.3 / IEC62619 / IEC61000 (More Available Upon Request)

[1] Test conditions: 100% depth of discharge (DOD), 0.2C rate charge & discharge at 25°C.
[2] 1C configuration as factory default.
[3] Charge/discharge derating occurs when the temperature is below 0°C or above 45°C.
[4] Please refer to the Warranty Letter for applicable conditions; the warranty is due whichever comes first.

Product Overview

Brief Introduction

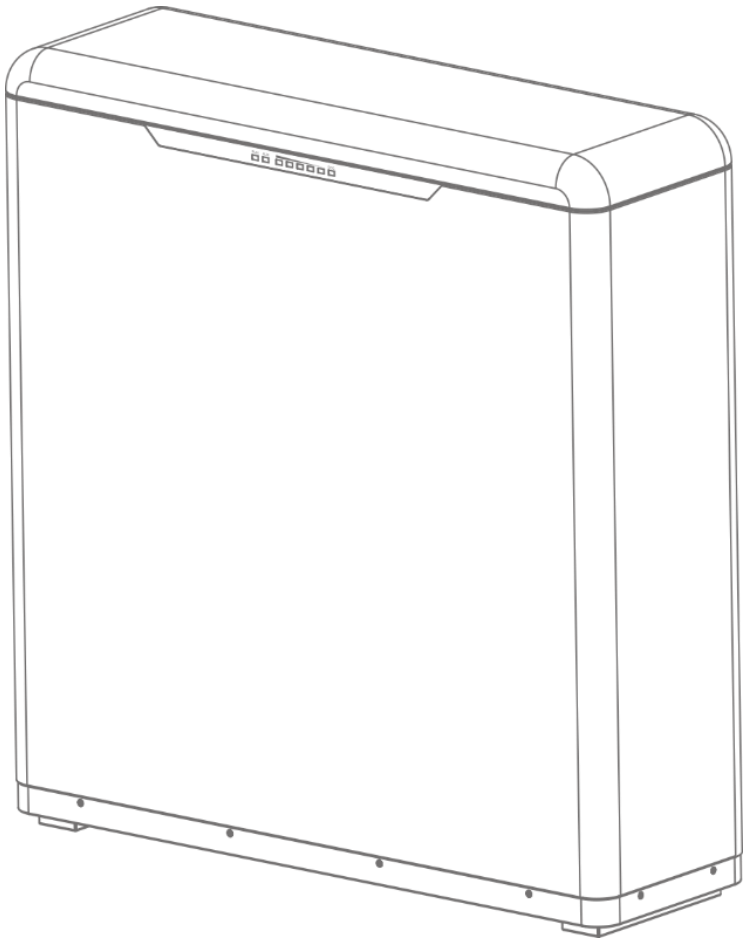

IES-BATT-14.33 is a lithium battery with an operating voltage range between 44.8~56.16V. It is designed for residential energy storage applications and works together with a 48V battery hybrid inverter. **IES-BATT-14.33 is not suitable for supporting life-sustaining medical devices.**

IES-BATT-14.33 has built-in BMS (Battery Management System), which can manage and monitor cells information including voltage, current and temperature. Besides that, BMS can balance cells charging to extend cycle life. BMS has protection functions including over-discharge, over-charge, over-current and high/low temperature, the system can automatically manage the charge state, discharge state and balance state.

Multiple IES-BATT-14.33 can be connected in parallel to expand capacity and power, and 15 IES-BATT-14.33 can be connected in parallel at most.

Interface Introduction

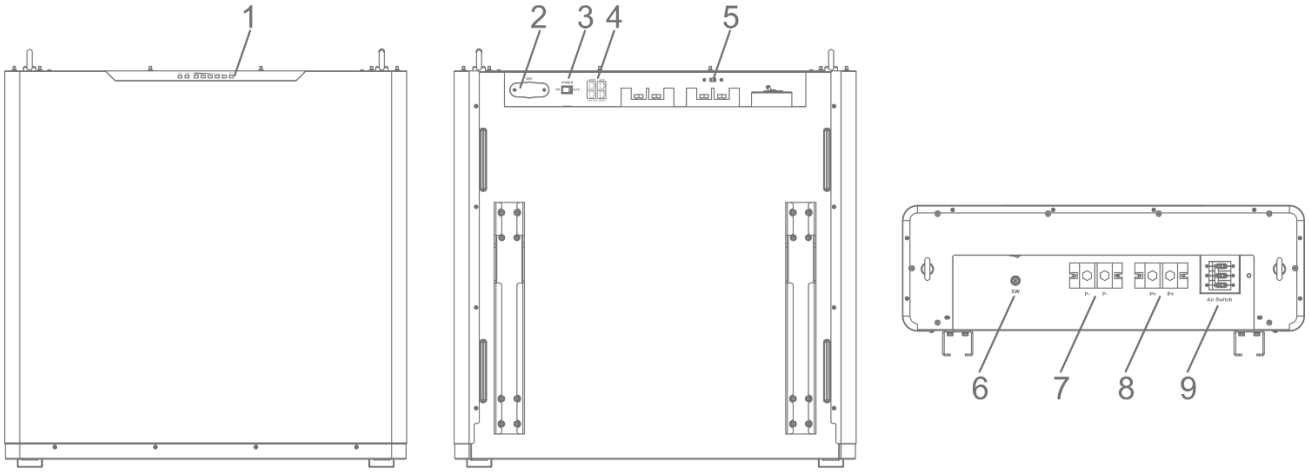

Operation interface descriptions		
Serial No	**Name**	**Description**
1	Status indicator	Operation, alarm, and SOC status
2	WiFi interface (Reserved)	Reversed port for WiFi
3	POWER	Weak current switch
4	Communication port	Communication interface
5	Slide switch	BMS power supply switch
6	SW	Reset switch
7	Negative terminal	Total negative terminal
8	Positive terminal	Total positive terminal
9	Air switch	Output switch

1. Switch ON

For a single IES-BATT-14.33, firstly switch ON the Air switch (9), Slide switch (5), and POWER Switch (3) then long press (over 3 seconds) SW (6) afterwards, the LED will flash, and the battery will work normally. L1 to L6 shows battery SOC, and L7 / L8 shows battery status.

For multiple IES-BATT-14.33 in parallel, firstly switch ON the Air switch (9), Slide switch (5) and POWER switch(3) of all the batteries, long press (more than 3 seconds) the SW button of only the Master battery, the LED's will flash, and the battery system will automatically encode and assign ID to each slave battery, then the battery system will operate normally.

2. Switch OFF

Press the SW button of the Master pack for more than 3 seconds and then release the button, the master pack will shut down after all slave packs shut down (sleep mode).

For a single IES-BATT-14.33, switch OFF POWER (3) and Air switch (9).

For multiple IES-BATT-14.33 in parallel, switch OFF POWER (3) and Air switch (9) on all slave batteries first. Then switch OFF POWER (3) and Air switch (9) on the Master battery.

LED Indicator Definition

NOTE:
Flash 1 - 0.25s light / 3.75s off
Flash 2 – 0.5s light / 0.5s off
Flash 3 – 0.5 light / 1.5s off

LED Indicator Instructions

		RUN	ALM	Battery Level Indicator						
Status		L8	L7	L6	L5	L4	L3	L2	L1	Descriptions
Shutdown		OFF	OFF	OFF	OFF	OFF	OFF	OFF	OFF	All OFF
Standby		Flash 1	OFF	According to the battery level						Indicated Standby
Charging	Normal	Light	OFF	According to the battery level						The highest capacity indicator LED flashes (flash 2), other lighting
	Full Charged	Light	OFF	Light	Light	Light	Light	Light	Light	Turn to standby status when the charger is off
	Protection	OFF	Light	OFF	OFF	OFF	OFF	OFF	OFF	Stop charging
Discharge	Normal	Flash 3	OFF	According to the battery level						
	UVP	OFF	OFF	OFF	OFF	OFF	OFF	OFF	OFF	Stop charging
	Protection	OFF	Light	OFF	OFF	OFF	OFF	OFF	OFF	Stop discharging
Fault		OFF	Light	OFF	OFF	OFF	OFF	OFF	OFF	Stop charging & discharging

Charging Battery Level Indicators Instructions

Status		Charging							
Battery Level Indicator		L8	L7	L6	L5	L4	L3	L2	L1
Battery Level (%)	0~17%	Light	Light	OFF	OFF	OFF	OFF	OFF	Flash 2
	18~33%			OFF	OFF	OFF	OFF	Flash 2	Light
	34~50%			OFF	OFF	OFF	Flash 2	Light	Light
	51~66%			OFF	OFF	Flash 2	Light	Light	Light
	67~83%			OFF	Flash 2	Light	Light	Light	Light
	84~100%			Flash 2	Light	Light	Light	Light	Light
	Full Charged			Light	Light	Light	Light	Light	Light

Discharging Battery Level Indicators Instructions

Status		Charging							
Battery Level Indicator		L8	L7	L6	L5	L4	L3	L2	L1
Battery Level (%)	0~17%	Flash 3	OFF	OFF	OFF	OFF	OFF	OFF	Light
	18~33%			OFF	OFF	OFF	OFF	Light	Light
	34~50%			OFF	OFF	OFF	Light	Light	Light
	51~66%			OFF	OFF	Light	Light	Light	Light
	67~83%			OFF	Light	Light	Light	Light	Light
	84~100%			Light	Light	Light	Light	Light	Light

Protection Fault Indicators Instructions

Status	Protection Fault							
Status Battery Level indicator	L8	L7	L6	L5	L4	L3	L2	L1
Battery Level (%)	OFF / Light	Light	84~100%	67~83%	51~66%	34~50%	18~33%	0~17%
Cell failure			OFF	OFF	OFF	OFF	OFF	OFF
NTC failure			Light	OFF	OFF	OFF	OFF	OFF
Pre-charge failure			OFF	Light	OFF	OFF	OFF	OFF
Short circuit fault			Light	Light	OFF	OFF	OFF	OFF
Chargin MOS failure			OFF	OFF	Light	OFF	OFF	OFF
Discharging MOS failure			Light	OFF	Light	OFF	OFF	OFF
Pre-charge failure			OFF	Light	Light	OFF	OFF	OFF
Total negative contact failure			Light	Light	Light	OFF	OFF	OFF
Overvoltage protection of charging cells			OFF	OFF	OFF	Light	OFF	OFF
Overall charging overvoltage protection			Light	OFF	OFF	Light	OFF	OFF
Discharge cell undervoltage			OFF	Light	OFF	Light	OFF	OFF
Discharge overall undervoltage charge			Light	Light	OFF	Light	OFF	OFF
Discharge overall undervoltage protection			OFF	OFF	Light	Light	OFF	OFF
Discharge over current protection			Light		Light	Light	OFF	OFF
Charge high temperature protection			OFF	Light	Light	Light	OFF	OFF
Charging low temperature protection			Light	Light	Light	Light	OFF	OFF
High temperature protection for discharge			OFF	OFF	OFF	OFF	Light	OFF
Discharge low temperature protection			Light	OFF	OFF	OFF	Light	OFF
MOS tube high temperature protection			OFF	Light	OFF	OFF	Light	OFF
Environmental low temperature protection			Light	Light	OFF	OFF	Light	OFF
Ambient high temperature protection			OFF	OFF	Light	OFF	Light	OFF

Notes: 1. The fault lamp ALM is not on in a normal state, at this time the SOC lamp is used as a power indication, the fault lamp ALM is always on when the fault occurs, and the SOC lamp is on according to the fault sequence number (priority sequence number from low light), if a variety of protection faults exist, the RUN lamp also needs to be on constantly.

INFINITE | ENERGY | STORAGE
www.ies.co.za | 021 773 0203 | support@ies.co.za | 066 225 4717

CAN / RS485 Port

CAN / RS485 Communication Terminal (RJ45 port), connects to inverter, and follows CAN / RS485 protocol.

PIN	Definition
Pin 1, Pin 8	RS485-B (to PCS, reserved)
Pin 2, Pin 7	RS485-A (to PCS, reserved)
Pin 3	NC
Pin 4	CANH (to PCS)
Pin 5	CANL (to PCS
Pin 6	GND

RS232 Port

RS232 Communication Terminal (RJ45 port) follows RS232 protocol, for manufacturers or professional engineers to debug or service.

PIN	Definition
Pin 1, Pin 8	GND
Pin 2, Pin 7	RS232_TX
Pin 3, Pin 6	RS232_RX
Pin 4, Pin 5	NC

Installation Guide

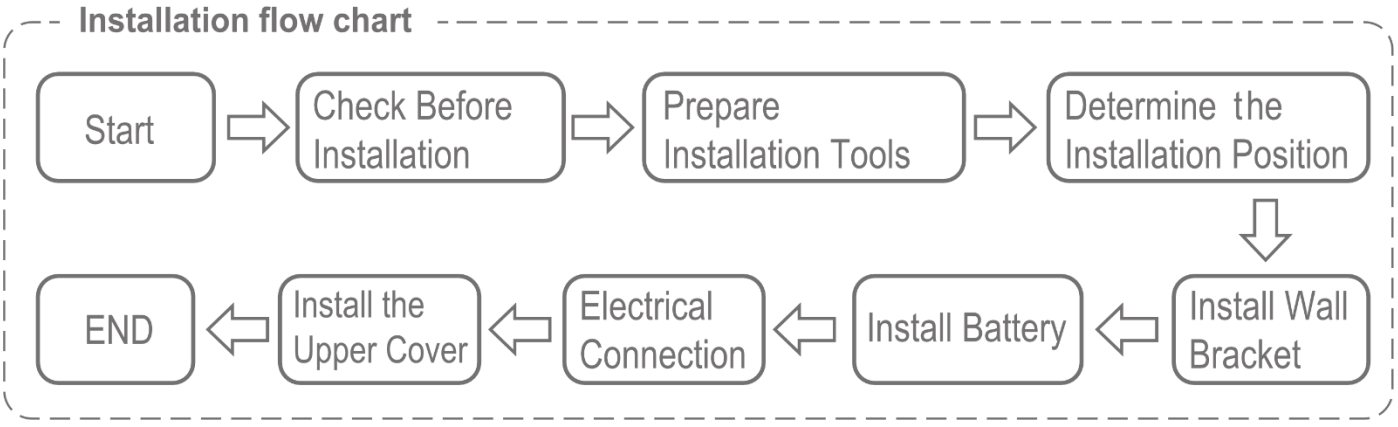

Checking Before Installation

Checking Outer Packing Materials

Packing materials ad components may be damaged during transportation. Therefore, check the outer packing materials before installing the battery. Checking the surface of packing materials for damage, such as hole and cracks. If any damage is found, do not unpack the battery and contact the dealer as soon as possible. You are advised to remove the packing material within 24 hours before installing the battery.

After unpacking the deliverables, check whether all the deliverables are intact and complete. If any damage is found or any component is missed, contact the dealer.

The below table shows the components ad mechanical parts that should be delivered.

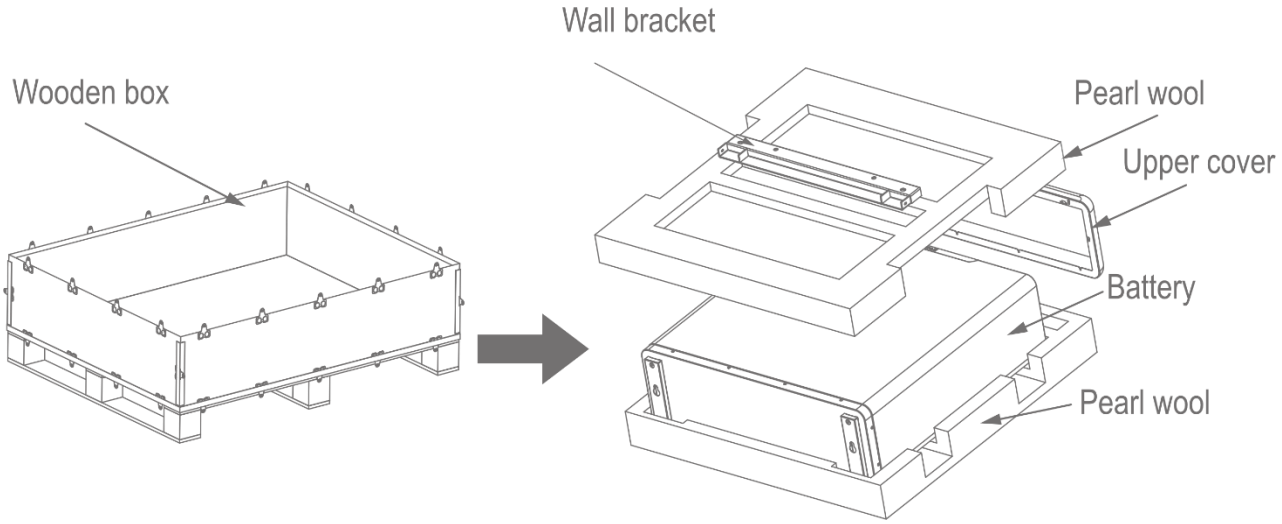

NO.	Pictures	Quantity	Description
1	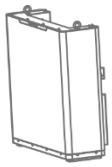	1PCS	Battery
2		1PCS	Wall bracket
3		1PCS	Upper cover
4		4PCS	M10*80
5		2PCS	M4*20
6		1PCS	Manual
7		1PCS	Test report
8		1PCS	Certificate

Tools

Model	Tools		
Installation	Knife 	Measuring tape 	Socket wrench (10/16mm) 
	Rubber mallet 	Cross screwdriver 	Hammer drill (8mm) 
Protection	ESD gloves 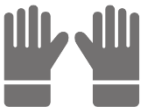	Safety goggles 	Anti-dust respirator 
	Safety shoes 		

Installation Requirements

Installation Environment Requirements

- Install the battery in the indoor environment.
- Place the battery in a secure location away from children and animals.
- Do not place the battery near any heat sources and avoid sparks.
- Do not expose the battery to moisture or liquids.
- Do not expose the battery to direct sunlight.

Installation Carrier Requirements

- Only mount batteries in fire-resistant buildings. Do not install batteries in flammable buildings.
- Due to the quite heavy battery, make sure the wall/ground can meet the load-bearing requirements.

Dimensions

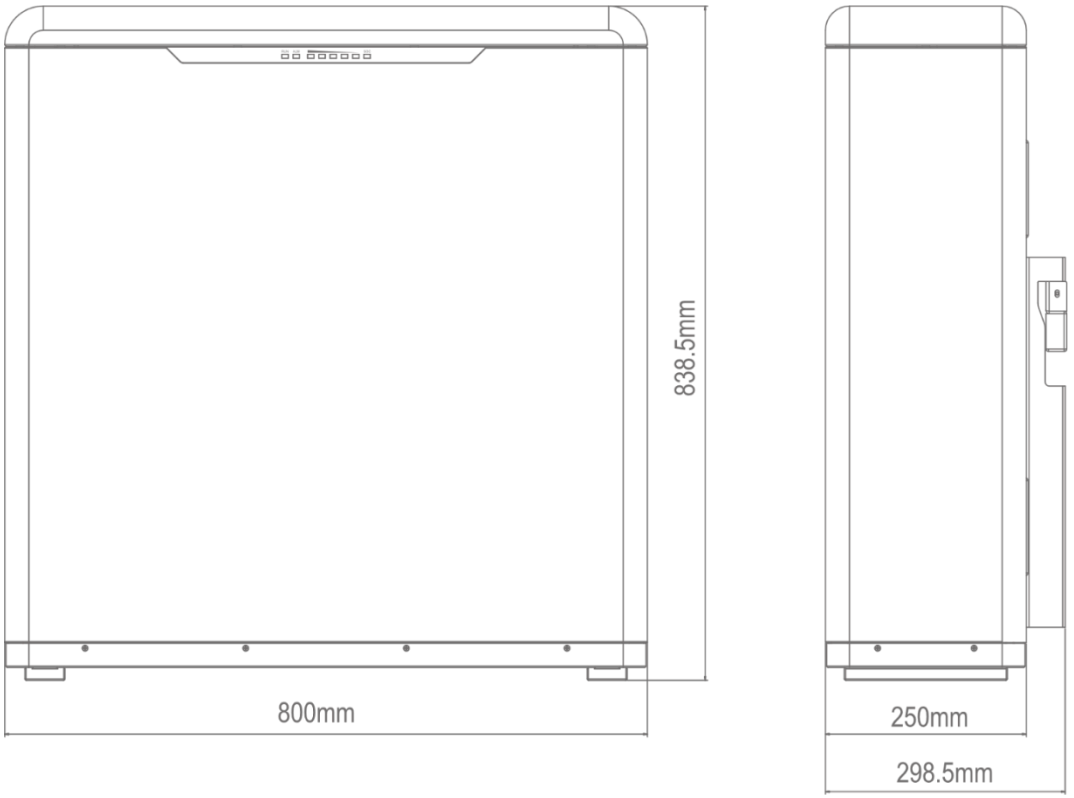

Minimum mounting distance between battery pack and equipment:

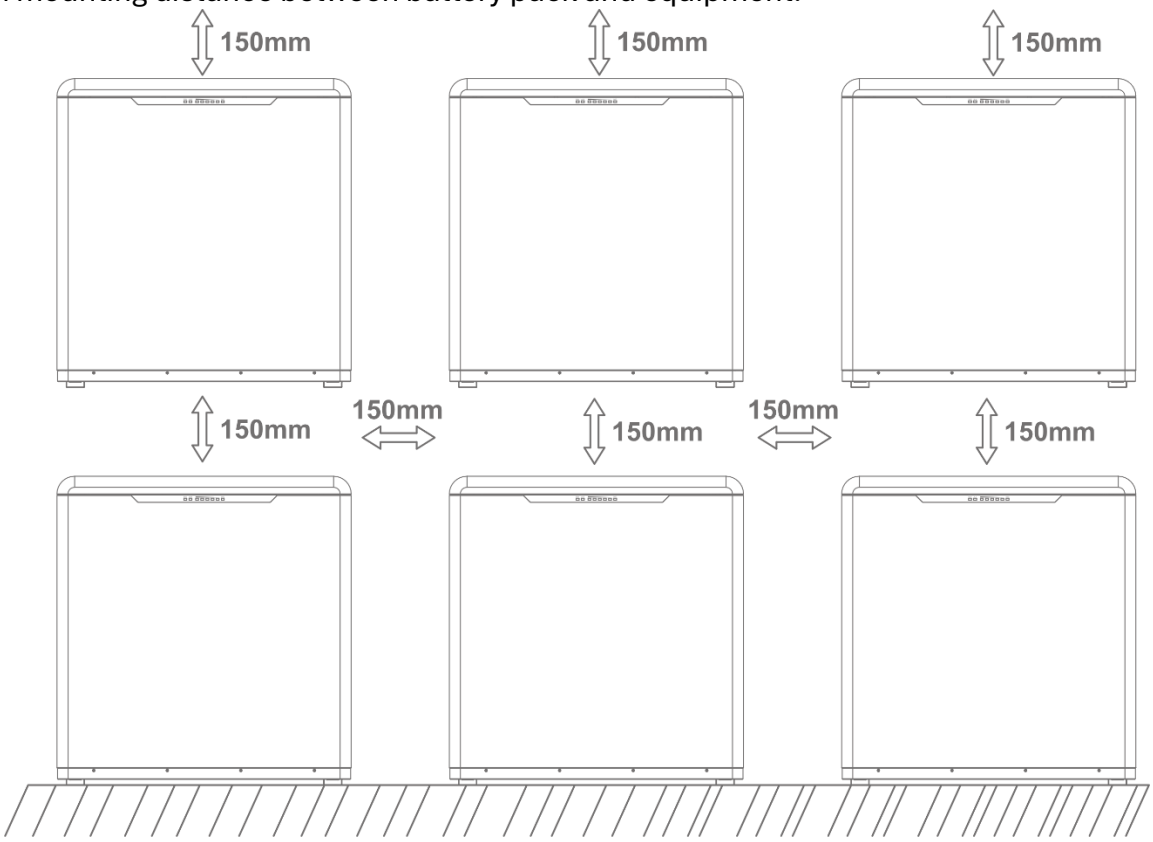

Installation Procedure

Step 1

Drill the hole with a 12mm drill bit as follows and fix the wall bracket to the wall.

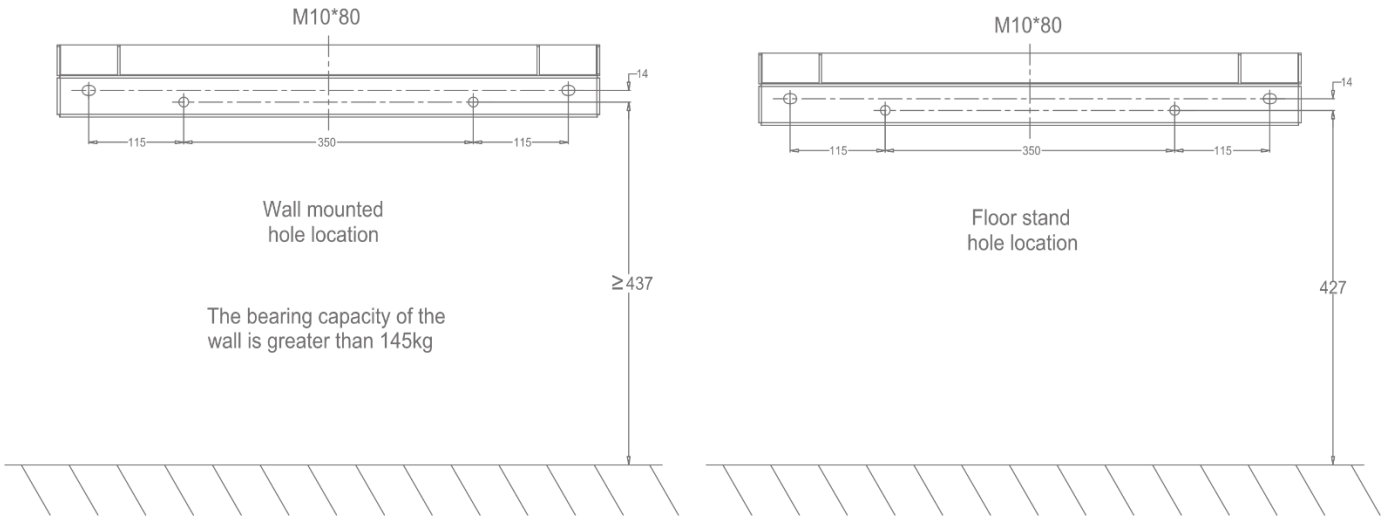

Step 2

Use a crane to lift the battery by the ring or handles on the battery pack and attach it to the wall bracket.

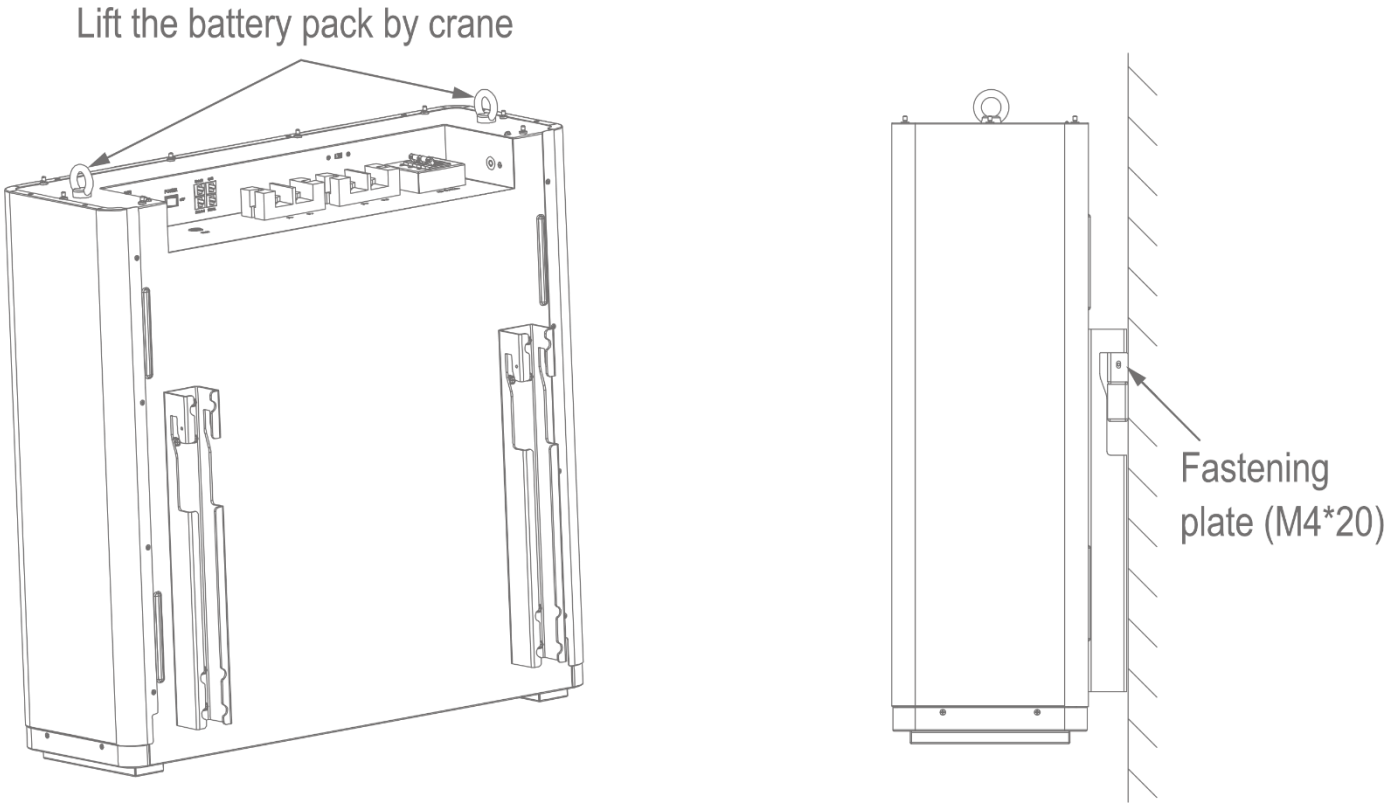

Step 3
Connect to the ground.

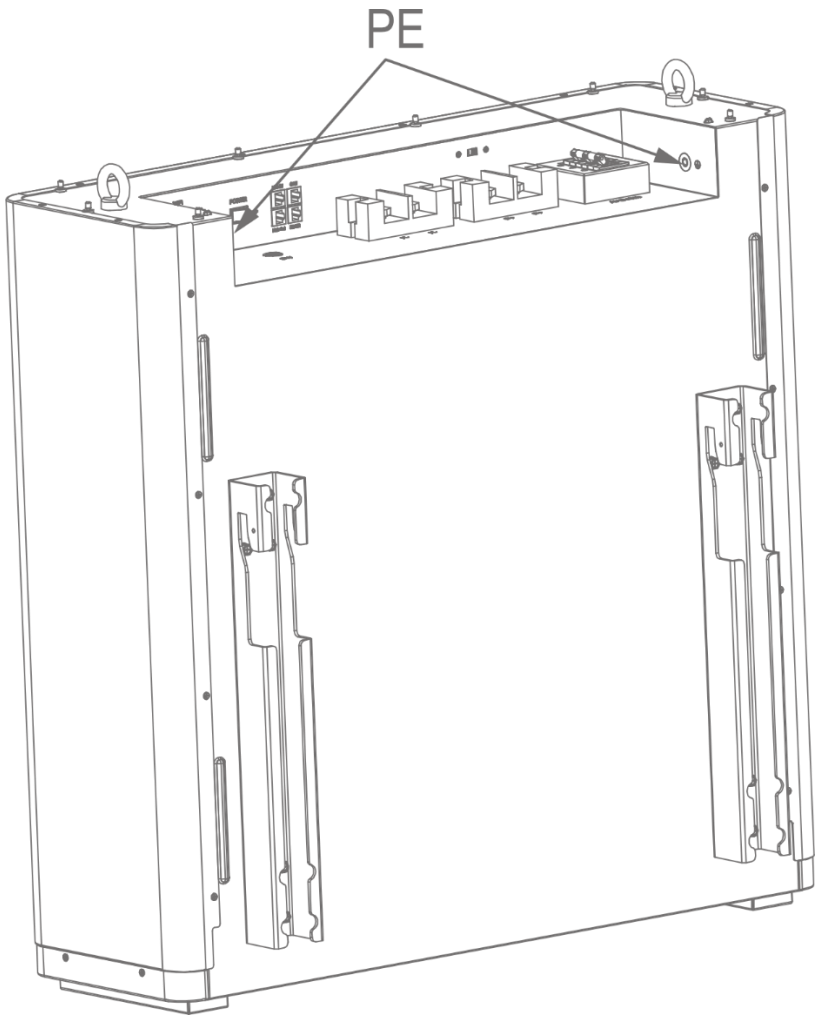

Step 4
Connect the power cable.
Note that all switches are OFF before wiring.

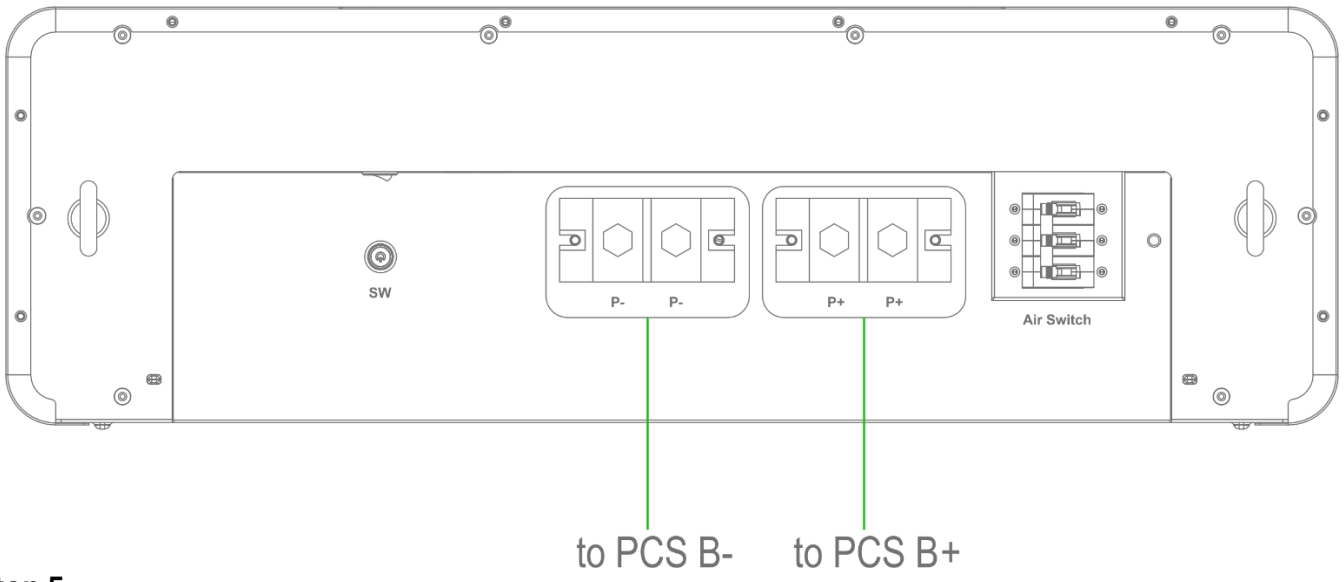

Step 5

Connect the communication cable.

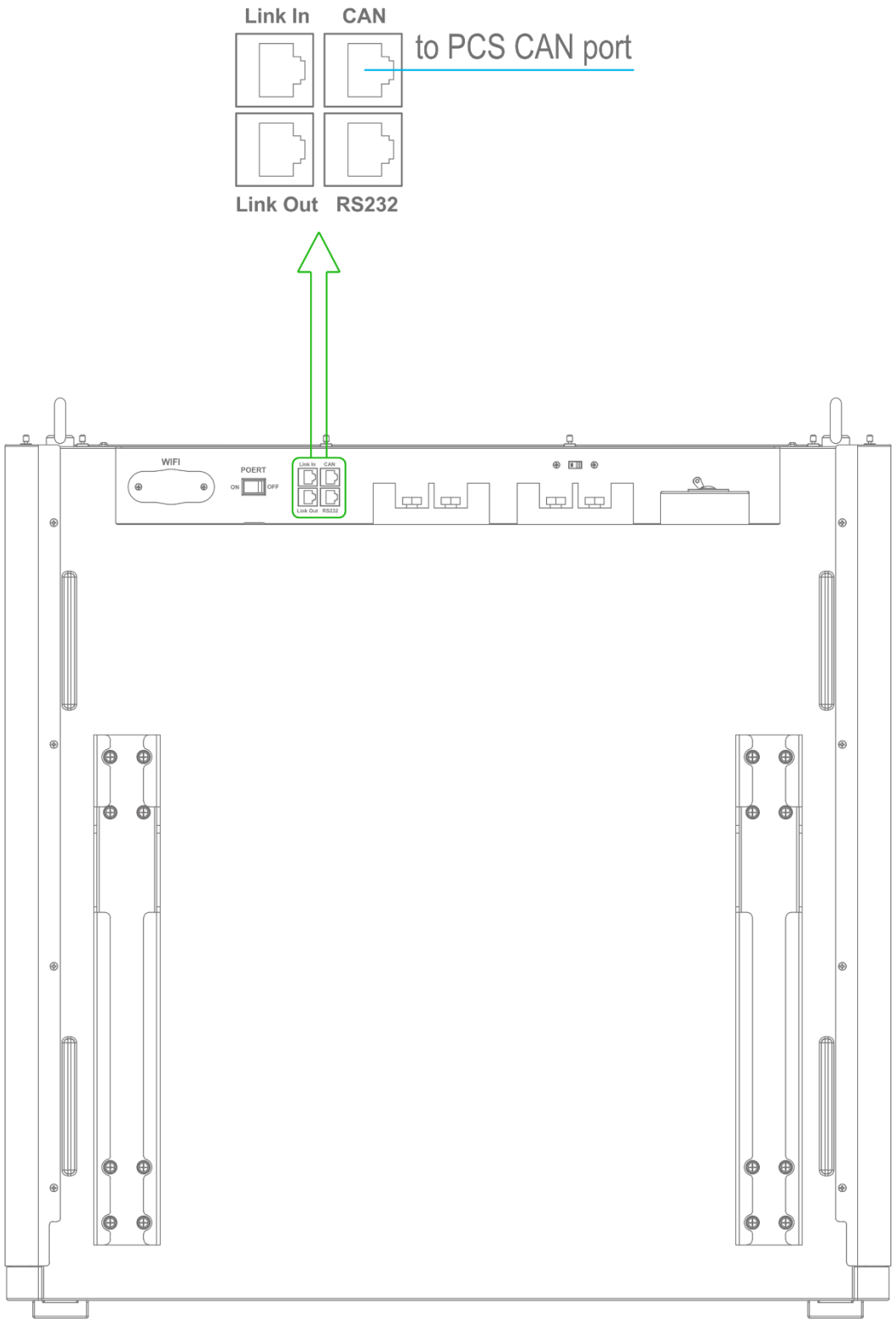

Step 6

When multiple batteries are connected in parallel, follow the following wiring mode. Parallel cables length is 1200mm, power cables length is 1700mm.

Scheme One

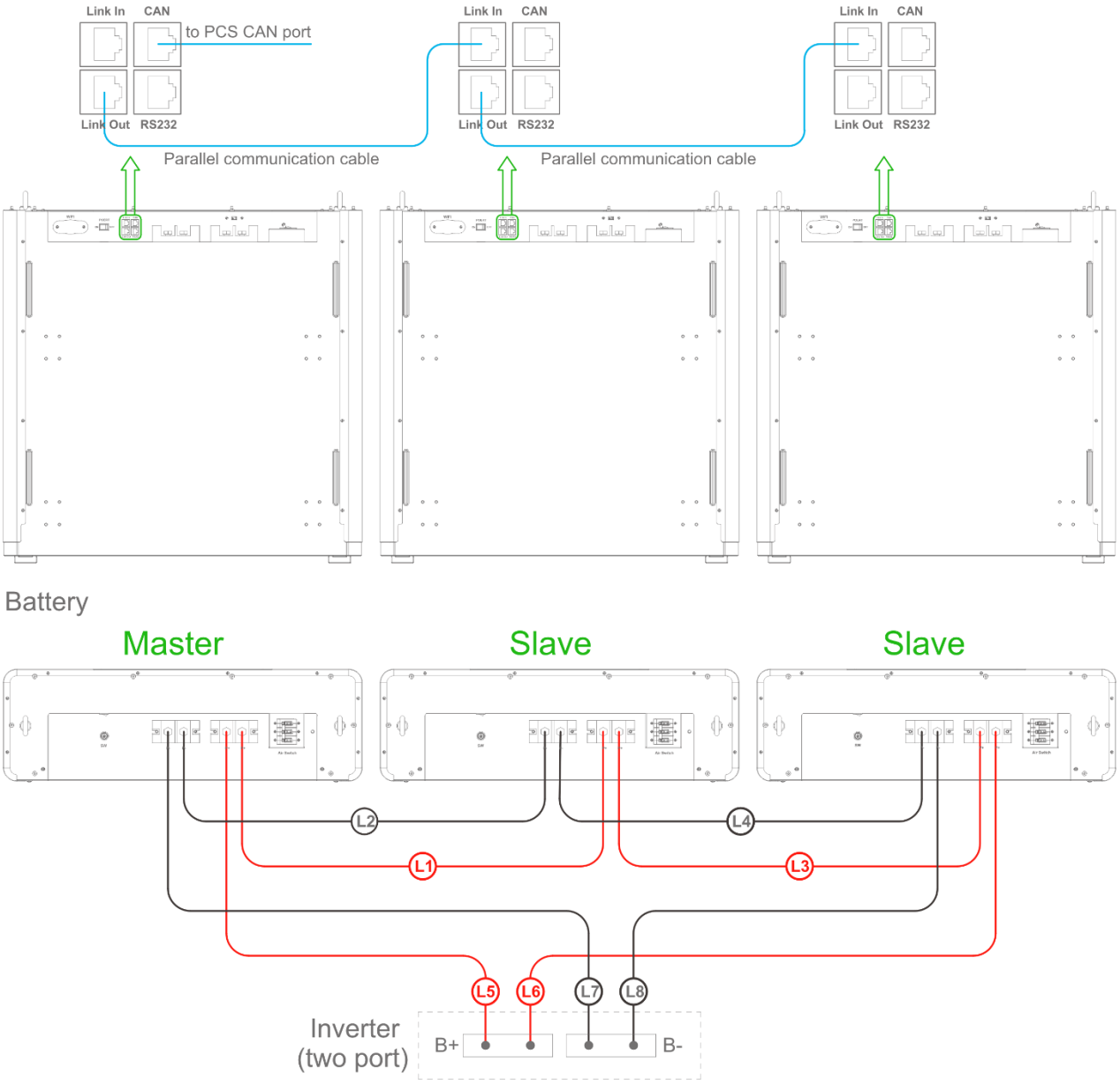

Scheme Two

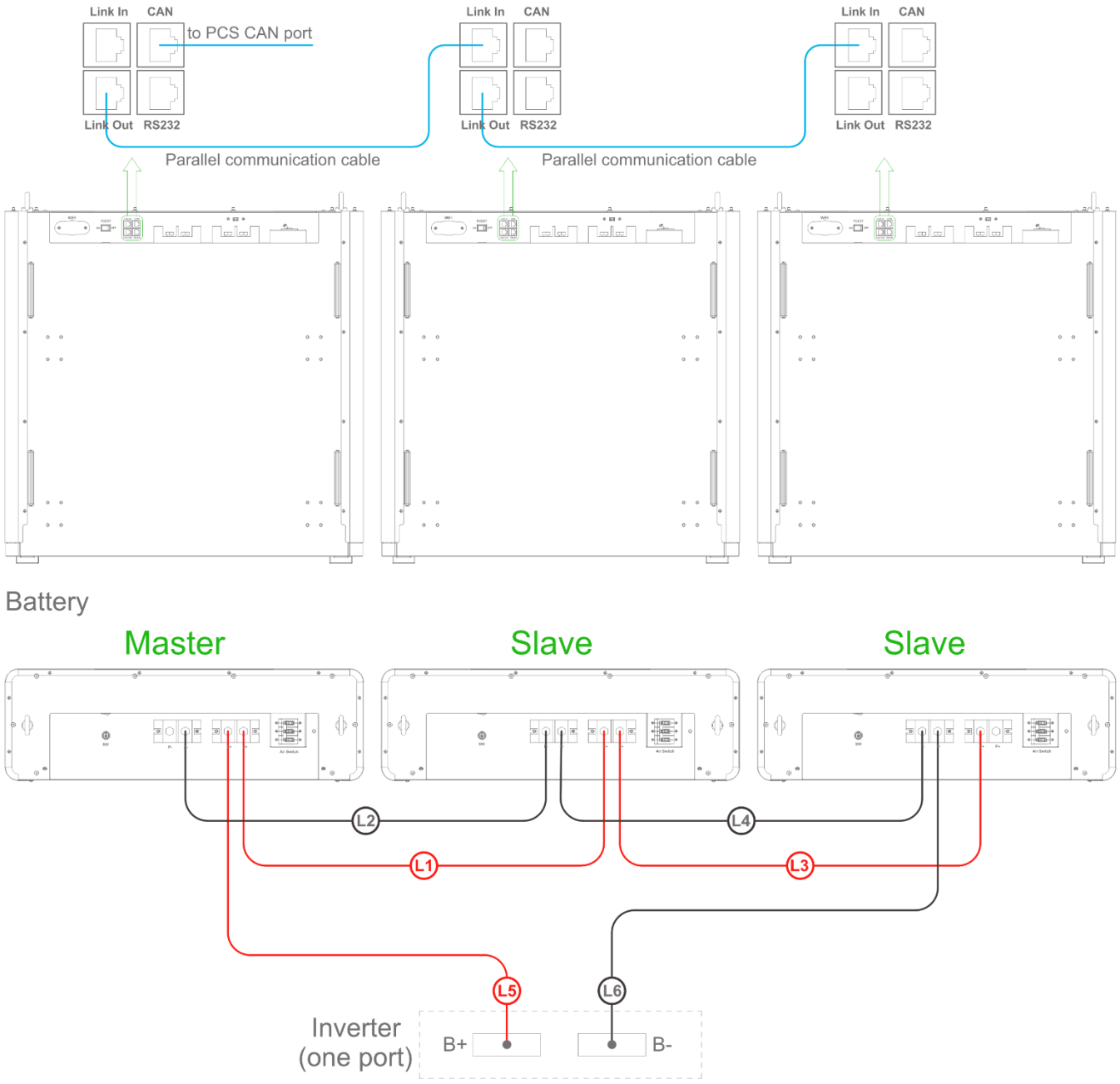
Link In
CAN
to PCS CAN port
Link Out
RS232
Parallel communication cable
Battery
Master
Slave
Slave
L2
L4
L1
L3
L5
L6
Inverter
(one port)
B+
B-

Step 7

Install the upper cover.

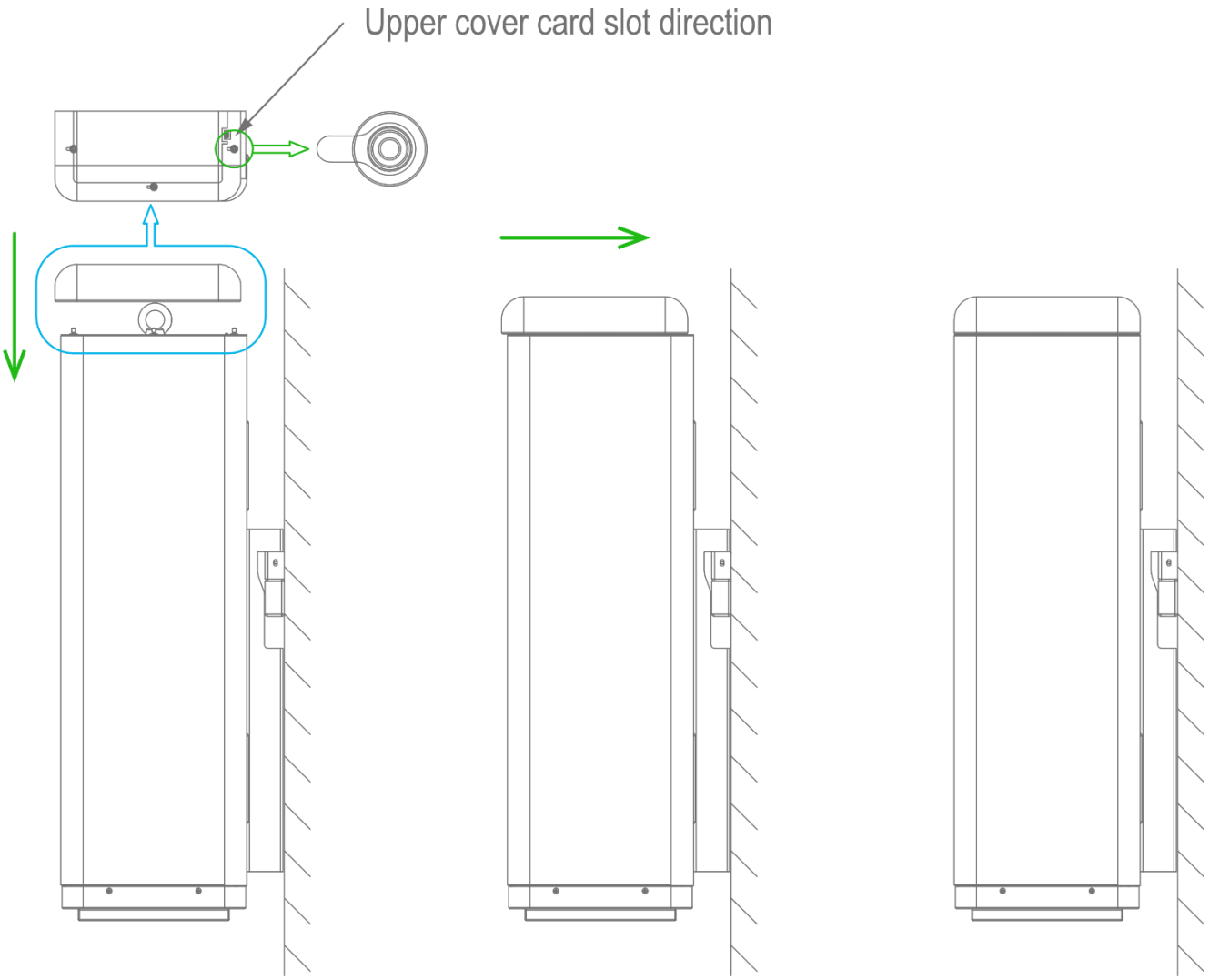

1. Align the mounting holes of the upper cover with the positioning pins of the box and lower it.
2. Push the upper cover in the direction of the arrow until it is flush with the box body and make sure the upper cover is stuck.
3. This is the installed state.

Recharge Requirement During Normal Storage

Battery should be stored in an environment with temperature range between -10°C ~ +45°C, and maintained regularly according to the following table with 0.5C (140 A) current till 40%SOC after a long storage time.

Recharge Conditions: When in Storage

Storage environment temperatures	Relative humidity of the storage environment	Storage time	SOC
Below -10°C	-	Prohibit	-
-10~25°C	5%~70%	≤12 months	30%≤SOC60%
25~35°C	5%~70%	≤6 months	30%≤SOC60%
35~45°C	5%~70%	≤3 months	30%≤SOC60%
Above 45°C	-	Prohibit	-

Recharge Requirement When Over Discharge

The over-discharged (90% DOD) battery should be recharged according to the following table; otherwise, the over-discharged battery will be damaged.

Recharge Conditions: When the Battery is Over Discharge

Storage environment temperatures	Storage time	Note
-10~25°C	≤15 Days	Battery pack disconnected from the PCS
25~35°C	≤7 Days	
-10~45°C	≤12 hours	Battery pack connected to PCS