

IES 143R

Installation Manual

Contents

Safety Requirement 3
Validity 3
Safety 3
Target group 3
Battery system installation steps 4
1.1 Installation preparation 4
1.2 Battery cluster installation 6
Cable Connection 10
2.1 Interface introduction 10
2.2 Ground Wire Connection 13
2.3 Connect communication cable 14
2.4 Connect Power Cable 18
2.5 Check After Installation 21

Safety Requirement

Validity

This document is used for quick start-up of the IES Battery: IES-BATT-143R. The information in this user manual is subject to change due to product updates or other reasons. We reserve the right to explain the details of the change.

Safety

The IES-BATT battery is a high voltage DC system, and it must be operated by authorized person. Read all safety instructions carefully before operating any work and observe them at all times when working on the system.

Incorrect operation or work may cause:
Injury or death to the operator or a third party.
Damage to the system hardware and other properties.

Note before installation

1. Check the battery to see if it has an intact appearance, complete contents, and the correct model.
2. Use insulating tools and wear personal protective equipment (PPE) when operating the equipment.
3. Follow the installation, operation, and configuration instructions. The manufacturer shall not be liable for equipment damage or personal injury if you do not follow the instructions.

Note in installation and maintenance

1. The DC cables connected to the system may be live. Touching non-insulation live DC cables' parts may result in death or serious injury due to electric shock.
2. Disconnect the battery from a voltage source and make sure it cannot be reconnected before checking on the battery.
3. Do not remove any power cable on load (in charging or discharging status).
4. Wear suitable personal protective equipment for all work on the system.

Check before Power On

1. The equipment is installed in a clean and flat place that is well-ventilated and easy to operate.
2. Ensure that the PE cable, the battery power copper bar, the inverter power cable, the communication cable, and the AC cable are connected correctly and securely.
3. Cable ties are intact, and routed properly and evenly.

Target group

Instructions in this document can only be performed by qualified persons who must have the following knowledge and skills:

- Knowledge of basic electrical systems and safety requirements.
- Knowledge of lithium batteries work and PCS.
- Knowledge of following local connection requirements and safety regulations.
- Knowledge and skills in the installation and commissioning of Solar or battery energy storage system.

Battery system installation steps

1.1 Installation preparation

1.1.1 Site planning

1.1.1.1 Installation environment

- Do not install the battery clusters in a high, low-temperature, or wet place that exceeds the specifications.
- Keep the battery clusters away from water sources, heat sources, and flammable and explosive materials.
- Avoid installing battery clusters in environments with direct sunlight, dust, volatile gases, corrosive substances, and excessive salts.
- It is not allowed to install the battery clusters in a working environment with metallic conductive dust.

1.1.1.2 Space reservation

- Reserve certain operation and ventilation space around the rack.
- Reserve at least 2000mm of operation and ventilation space in front.
- Reserve at least 500mm of operation space at the top.
- Reserve at least 100mm of ventilation space on the back

1.1.1.3 Reserved space (unit: mm)

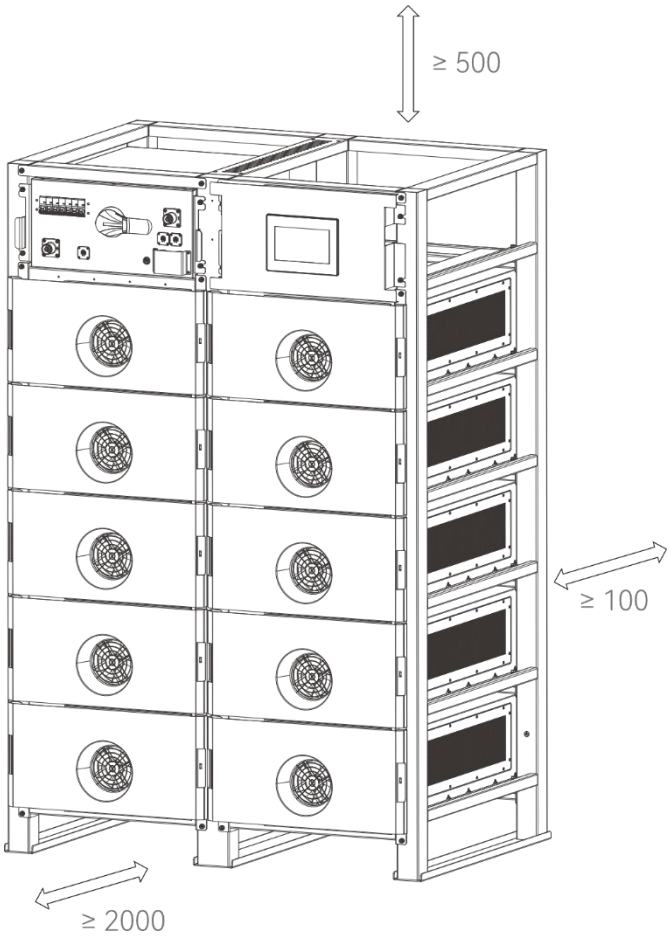

Figure 1.1 Schematic diagram of reserved space

1.1.2 Tool meter preparation

Note:
Use insulation tools to separate signal lines from strong current or high voltage lines to avoid electric shock.

Table 1.1 Installation tool list

Photo	Name	Photo	Name
	Impact drill		Torque socket wrench
	Torque wrench		Diagonal plier
	Crimping plier		Wire stripper
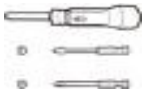	Torque screwdriver		Multimeter
	Cable tie		Insulating tape
	Herringbone ladder	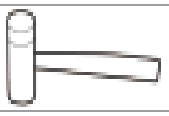	Rubber hammer

Table 1.2 Personal protective equipment list

Photo	Name	Photo	Name
	Safety gloves		Safety shoes
	Protective goggles		Dust mask

Table 1.3 Mechanical equipment list

Photo	Name	Photo	Name
	Electric forklift	1 unit	Load-bearing 3T
	Manual forklift	1 unit	Load-bearing 2T

1.1.3 Handling and unpacking inspection

Note:
To avoid turnover, fix the racked box to the forklift with a rope before moving.

- Move the rack carefully, as any impact or drop may cause damage to the rack. Once the box is placed, carefully remove the packaging to avoid scratching the rack. Keep the rack stable during the disassembly and assembly.
- If the rack installation environment is poor and long-term storage is required after unpacking, please take dust-proof measures.
- Ship the battery modules separately.

Operating steps:
Step 1:
Use a forklift to transport the rack, battery box, and related accessories to the specified location.

Step 2:
Check whether the appearance and packaging of the rack, battery box, and related accessories are intact.

Step 3:
Remove the outer packaging.

Step 4:
Check whether the rack, battery box, and related accessories are intact.

Step 5:
After confirming the rack is intact, move it to the specified location.

1.2 Battery cluster installation

1.2.1 Rack installation

Operating steps
Step 1: Determine the rack installation position, and mark the mounting holes on the installation ground according to the drawing:

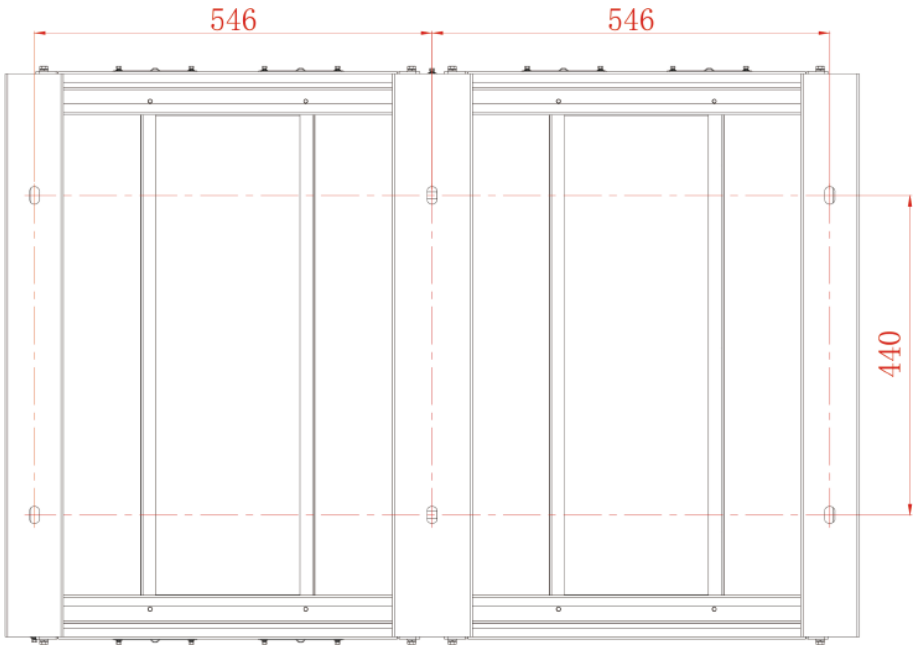

Figure 1.2 IES-R12 Rack fixed hole size drawing (unit: mm)

Step 2: Use an impact drill to drill holes in the mounting holes of the expansion bolts and then install four M12 expansion bolts into the mounting holes.

(1) M12 bolt.
(2) Spring washer.
(3) Flat washer.
(4) Expansion tube

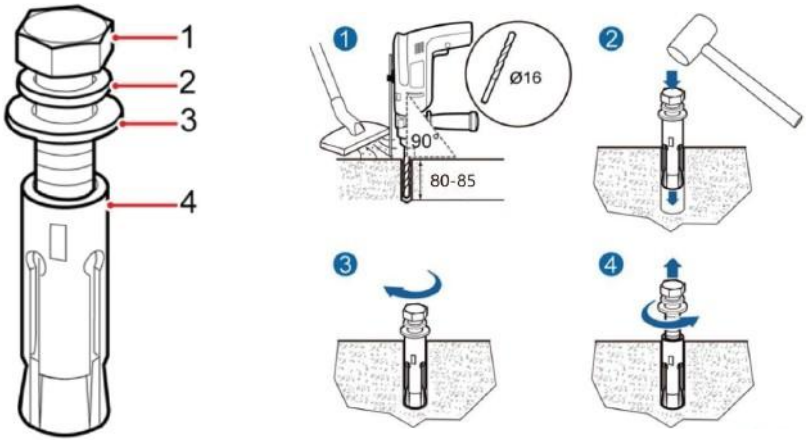

1. Punch holes in the concrete floor with an impact drill to a depth between 80 mm and 85 mm.
2. Tighten the expansion bolt slightly and place it vertically into the hole. Hit the expansion bolt with a rubber hammer until the expansion tube is all in the hole.
3. Pre-tighten the expansion bolts.
4. Unscrew the bolts and remove the spring washers and flat washers.

Step 3: Move the rack to the mounting location.

Step 4: Thread four M12x120 expansion bolts through the rack base holes, insert them into the expansion bolt mounting holes in the ground, and tighten the expansion bolts.

1.2.2 Battery module installation

1.2.2.1 Install the battery module and the main control box

Note:
Before installing the battery, please read the battery-related safety precautions carefully

Wear insulating gloves and use insulating tools during installation.
Please place the battery correctly to avoid vibration and shock.
When installing the battery module, place it from bottom to top and left to right to prevent the centre of gravity from tipping over.

The battery box is heavy and needs to be transported and lifted with a lifting platform with protection around it, if conditions are limited, 4 people are required to move it at the same time.
The installation method of the main control box is the same as the battery box.

Operating steps

Step 1: Remove the wooden box and move the battery box to a flat pallet.

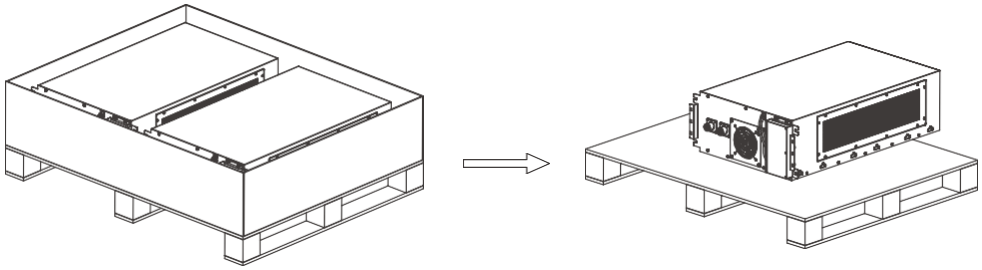

Step 2: Use an electric forklift to move the battery box to the front of the rack and raise the battery box to the corresponding height.

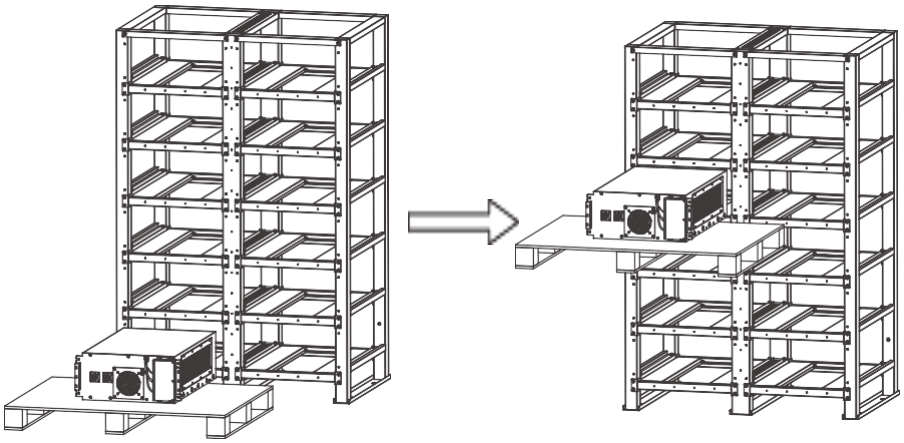

Step 3: Push the battery box inside the rack.

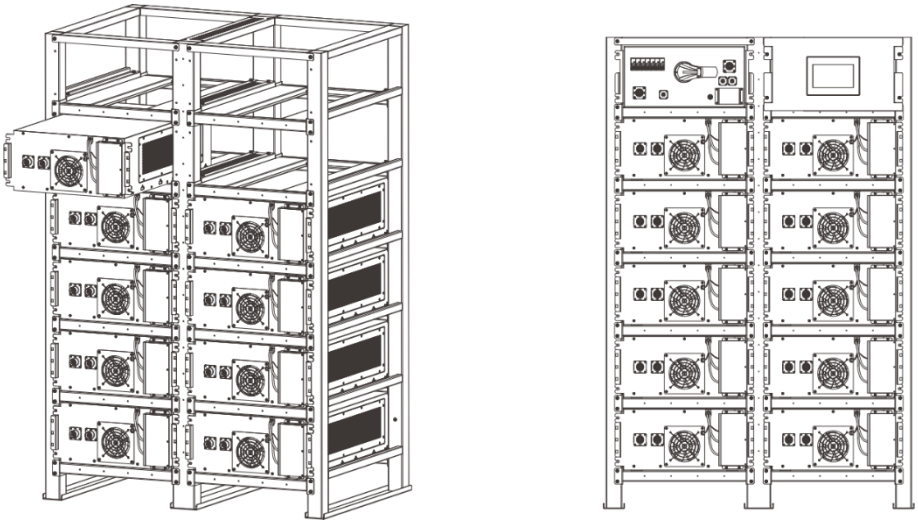

Step 4: Fix the battery box and the rack with lock screws.

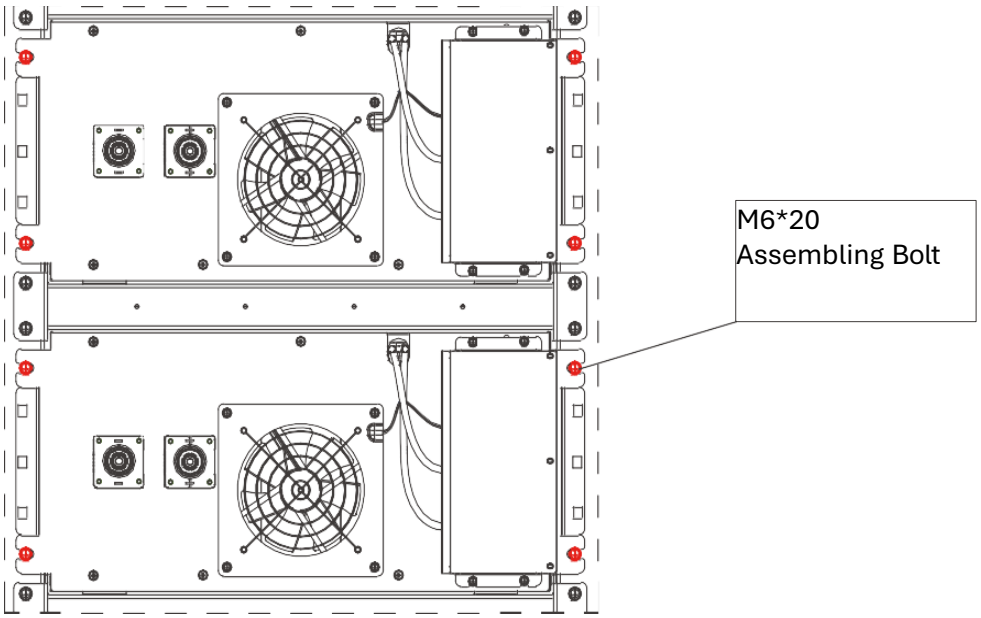

Cable Connection

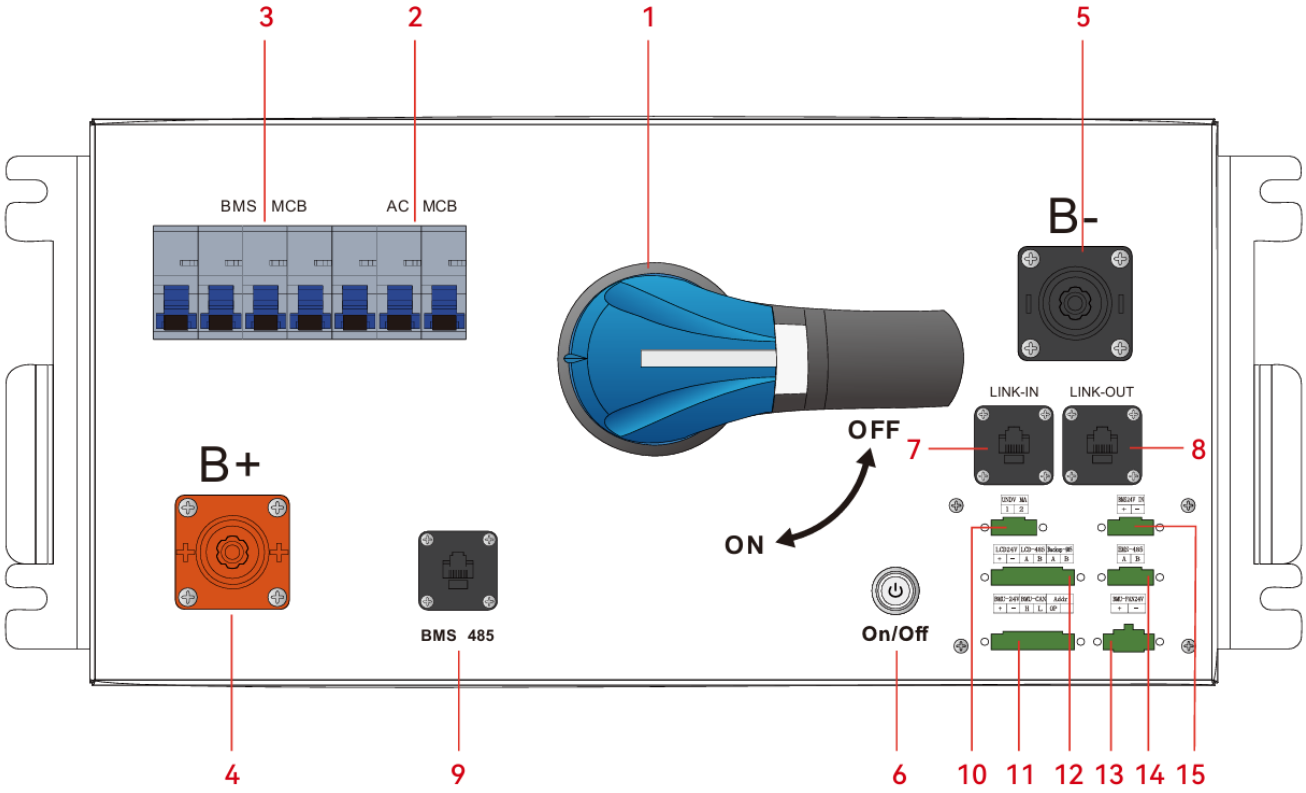

2.1 Interface introduction

Main control box and port function introduction

No	Name	Port	Description
1	Disconnecting switch		Turn on /off the battery and the main switch of the PCS circuit, pull the handle to “OFF” to disconnect, and pull the handle to “ON” to connect.
2	AC MCB		Breaker for AC/DC converter---FAN Power
3	BMS MCB		Breaker for DC/DC converter---BMS Power
4	B+		Connect with battery total +
5	B		Connect with battery total -
6	Button switch		Start / stop system button switch Green LED blinking in starting-up process Green LED on in normal status Red LED on in fault status

INFINITE | ENERGY | STORAGE
www.ies.co.za | 021 773 0203 | support@ies.co.za | 066 225 4717

7	Parallel comm. port	“2”and“7” to CAN_H		LINK IN Parallel input
		“3”and“6” to CAN_L		
		“5” to CAN_G		
		“4” to ADDR_IN		
8	Parallel comm. port	“2”and“7” to CAN_H		LINK OUT Parallel output (Matched Resistance 120Ω)
		“3”and“6” to CAN_L		
		“5” to CAN_G		
		“4” to ADDR_IN		
9	BMS 485	“1” to RS485_B		To Upper computer(Upgrade BCMU)
		“2” to RS485_A		
10	UNDV MA	1		Disconnect the trip function (BMS MCB)
		2		
11	BMU port	BMU-24V	+	24Vdc (BMU Power Supply)
			-	
		BMU-CAN	H	To BMU CAN
			L	
		Addr	OP	Coded Address Out
12	LCD Power Supply & Comm. Par	LCD24V	+	24Vdc (LCD Power Supply)
			-	
		LCD-485	+	To LCD RS485
			-	
		Backup-485	+	Reserved RS485 communication
			-	
13	BMU-FAN24V	+		24Vdc (Fan Power Supply)
		-		
14	EMS-485	A		Connect to the EMS
		B		
15	BMS24V IN	+		24Vdc-In (BMS Power Supply)
		-		

INFINITE | ENERGY | STORAGE
www.ies.co.za | 021 773 0203 | support@ies.co.za | 066 225 4717

Table 2.1 Main control box port description (FRONT)

Figure 2.2

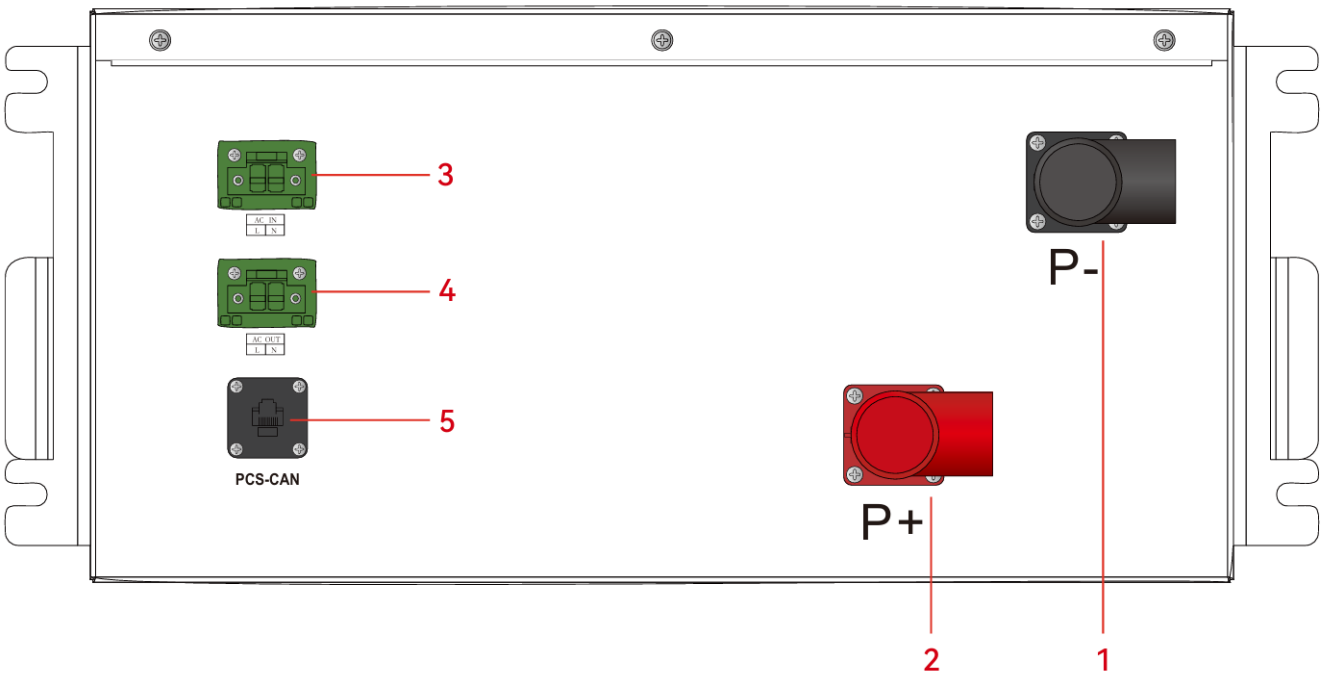

No	Name	Port		Description
1	P-			To PCS BAT-
2	P+			To PCS BAT+
3	AC Port	AC IN	L	180-264Vac (Fan Input Power Supply)
			N	
4	AC Port	AC OUT	L	180-264Vac (Fan power for the next battery cluster)
			N	
5	PCS-CAN	“4” to CAN_H		To PCS CAN
		“5” to CAN_L		

Table 2.2 Main control box port description (BACK)

Cable wiring prerequisites:
(1) The system is not powered on
(2) Turn the disconnecting switch of the main control box to “OFF”
(3) The main control box “BMS MCB” DC circuit breaker is in the OFF state
(4) The main control box “AC MCB” AC circuit breaker is in the OFF state
(5) PCS battery circuit breaker (Battery input) is in the OFF state
(6) PCS grid circuit breaker (AC input) is in the OFF state
(7) PCS maintenance switch (BYPASS) is in the OFF state
(8) PCS load circuit breaker (AC output) is in the OFF state

(9) PCS photovoltaic circuit breaker (PV input) is in the OFF state
(10) Wear insulating gloves and insulating shoes

Cable connection steps:
(1) Connect the ground wire (for details please see 2.2 ground wire and connection)
(2) Connect the battery system communication cable, and connect the battery system and PCS communication cable (for details please see 2.3)
(3) Connect the battery system power cable, and connect the battery system and PCS power cable (for details please see 2.4)

2.2 Ground Wire Connection

(1) Connect the ground wire of the battery rack system.

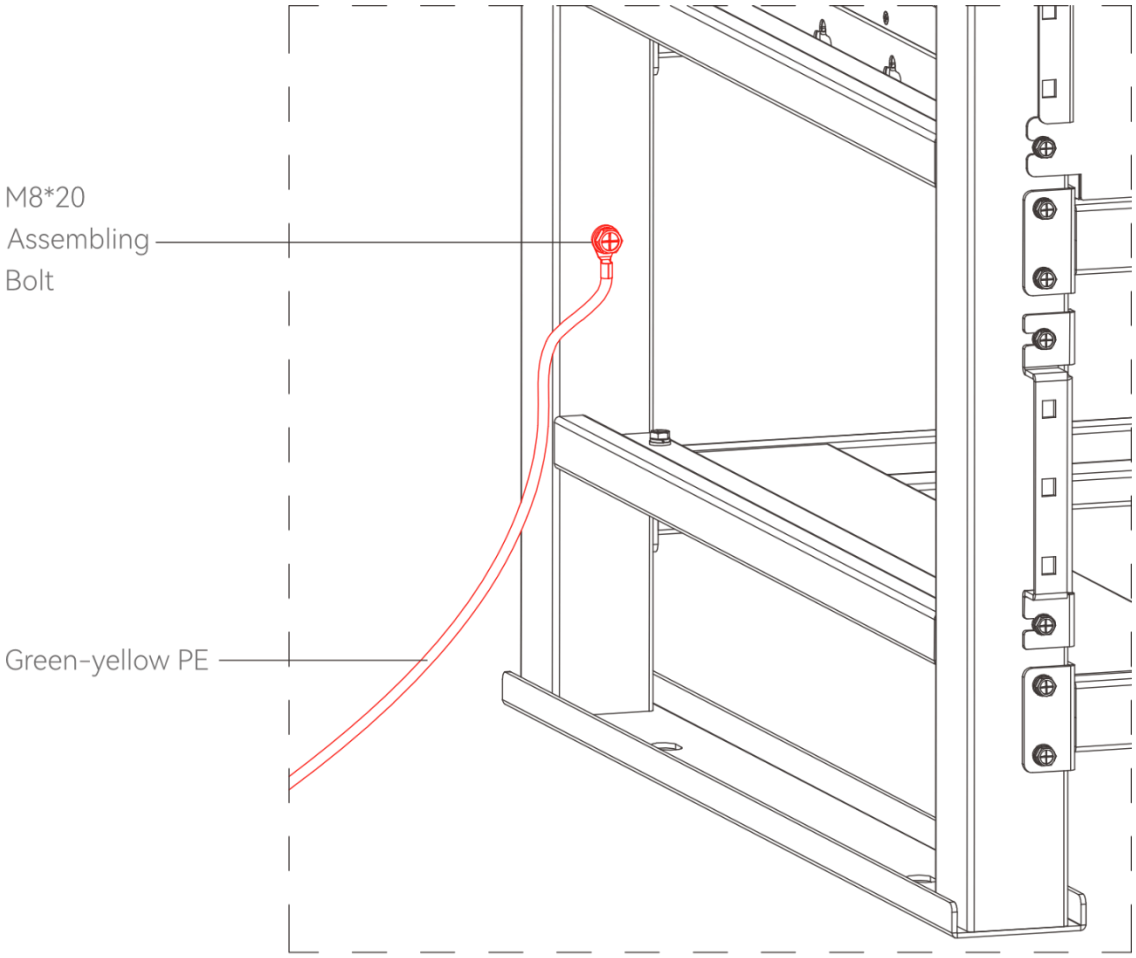

Figure 2.3

2.3 Connect communication cable

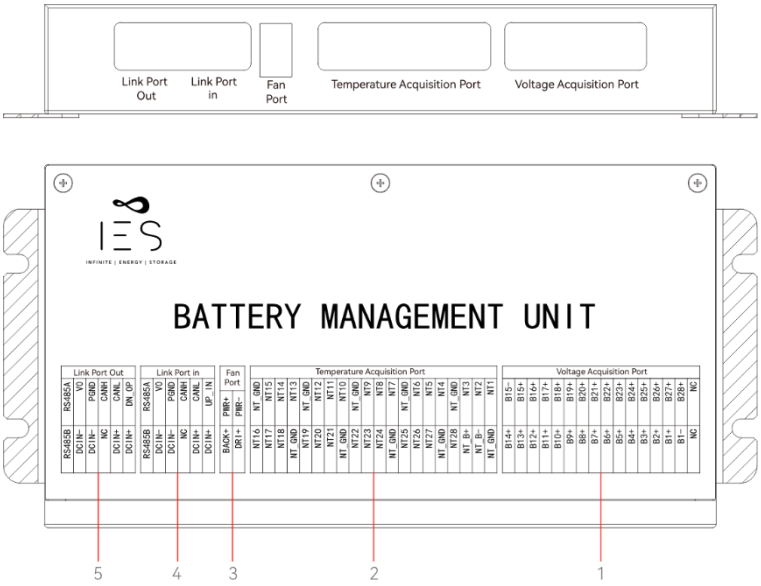

Figure 2.4 BMU photo

No	Description
1	Voltage sampling port, connect to the battery box voltage sampling
2	Temperature sampling port, connect to the battery box temperature sampling
3	Fan port, connect to the fan port of this battery box
4	Link Port In, communication input port
5	Link Port Out, communication output por

Table 2.3 BMU port description

Communication cable connection steps:

(1) Insert the voltage sampling, temperature sampling, and fan cables of each battery box into the BMU port (Figure 2.5).

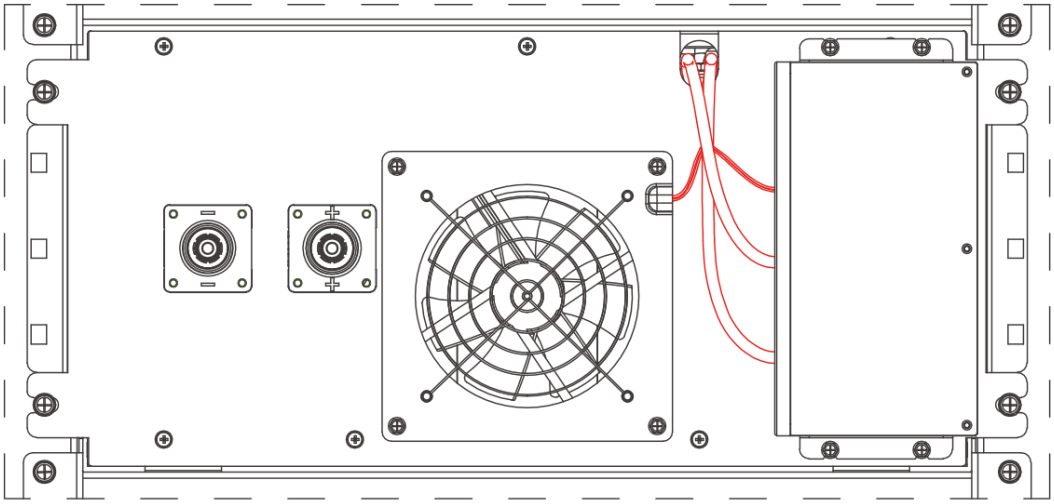

Figure 2.5

(2) Connect the BMU communication port of the main control box with first battery's BMU box Connect the BMU Fan Power cable to BCU (BMU-FAN 24V) port accordingly (Figure 2.6)

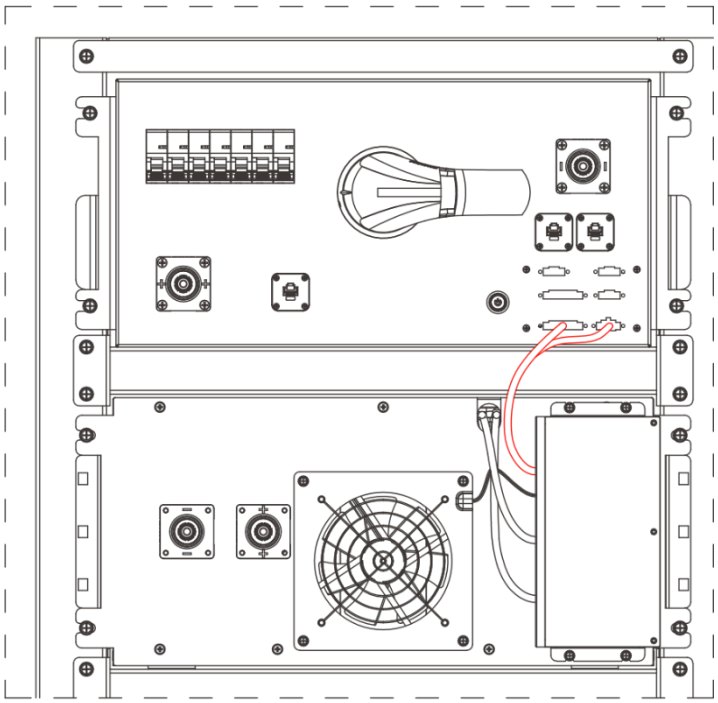

Figure 2.6

(3) It is the same for the connection between the previous BMU communication output port and the next BMU communication input port. Note: The BMU communication input port (Link Port In) at the lower end and the output port (Link Port Out) at the upper end (Figure 2.7).

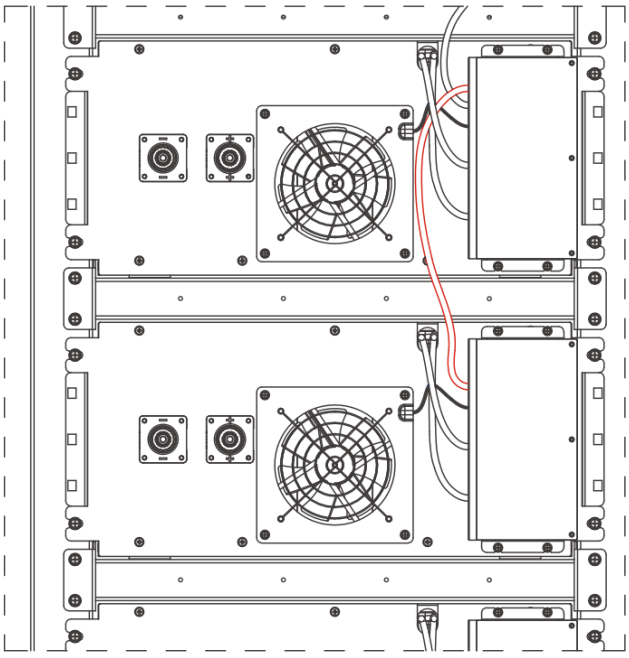

Figure 2.7

(4) Fourth and fifth battery box BMU communication connection (Figure 2.8).

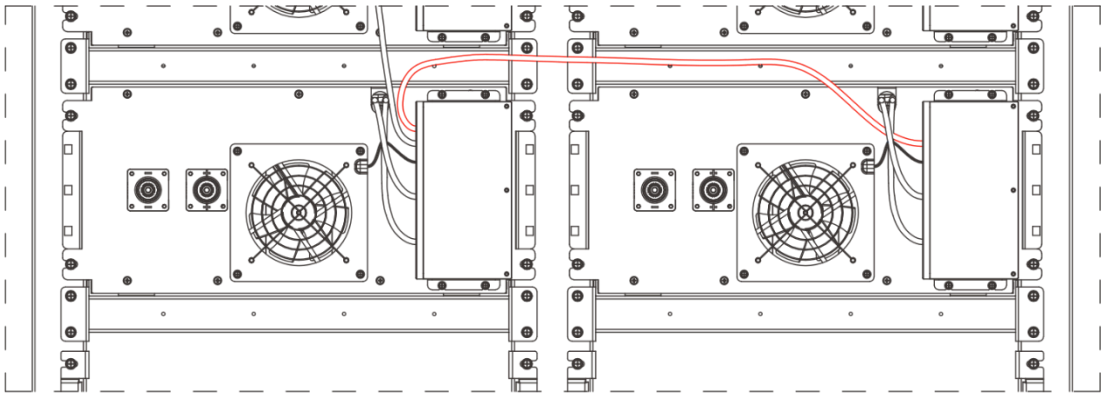

Figure 2.8

(5) The BMU communication output of the previous battery box is connected with the BMU communication input of the next battery box (Figure 2.9)

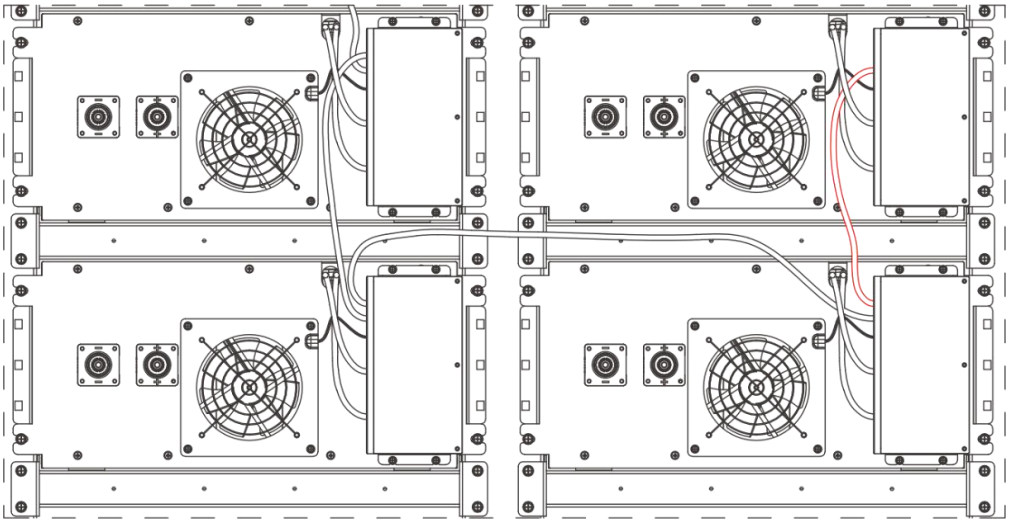

Figure 2.9

(6) The last battery box BMU output communication port has a 120Ω resistance plug (Figure 2.10)

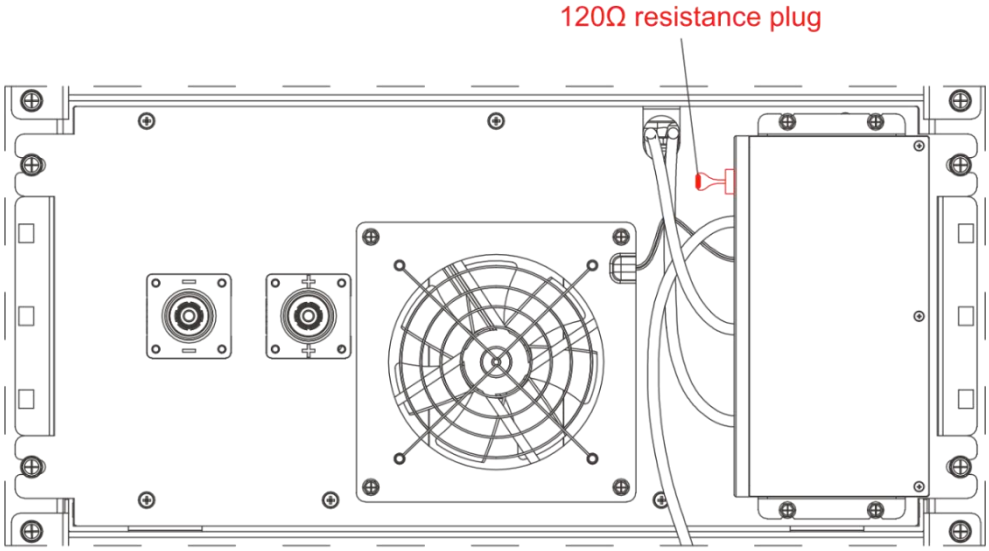

Figure 2.10

(7) The main control box communication CAN line is connected to the PCS communication CAN line. Plug in and lock the main control box CAN communication plug, and lock the PCS communication CAN port (Figure 2.11).

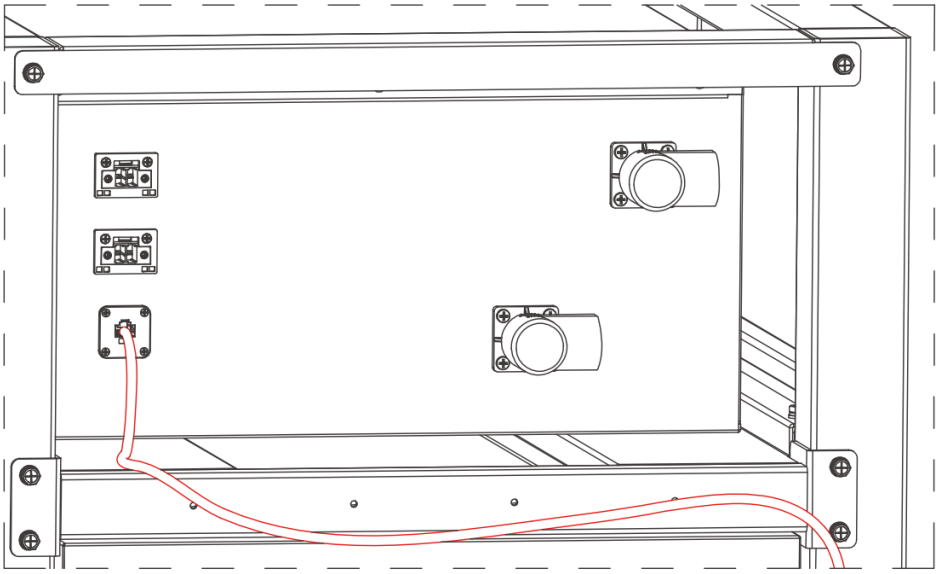

Figure 2.11

(8) Main control box 220Vac wiring:
The AC IN port is used for an external 220Vac input for fan power input. In Multiple clusters parallel mode, the AC OUT port is connected to the AC IN of the next battery cluster BCU (Figure 2.12).

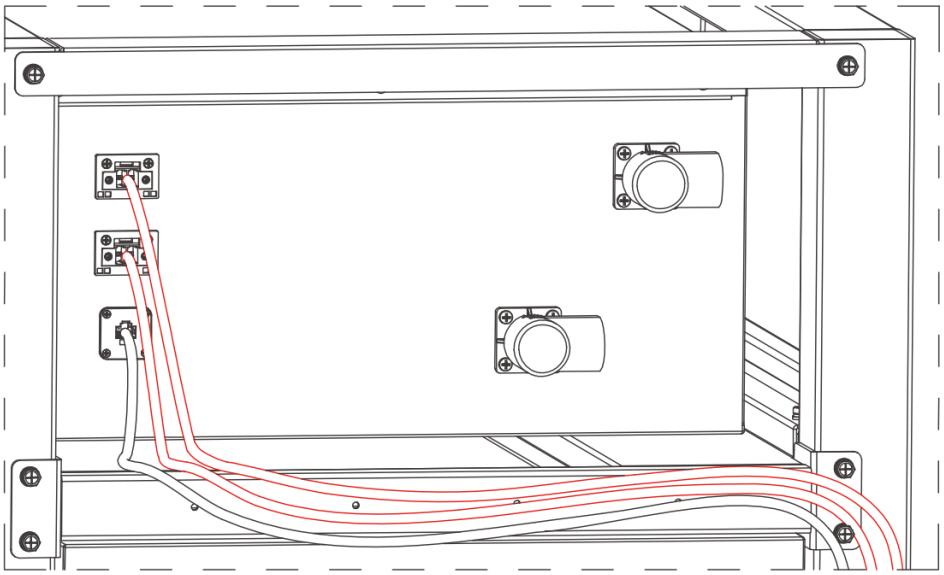

Figure 2.12

2.4 Connect Power Cable

Power cable connection steps:

(1) Connect the battery box in column 1.

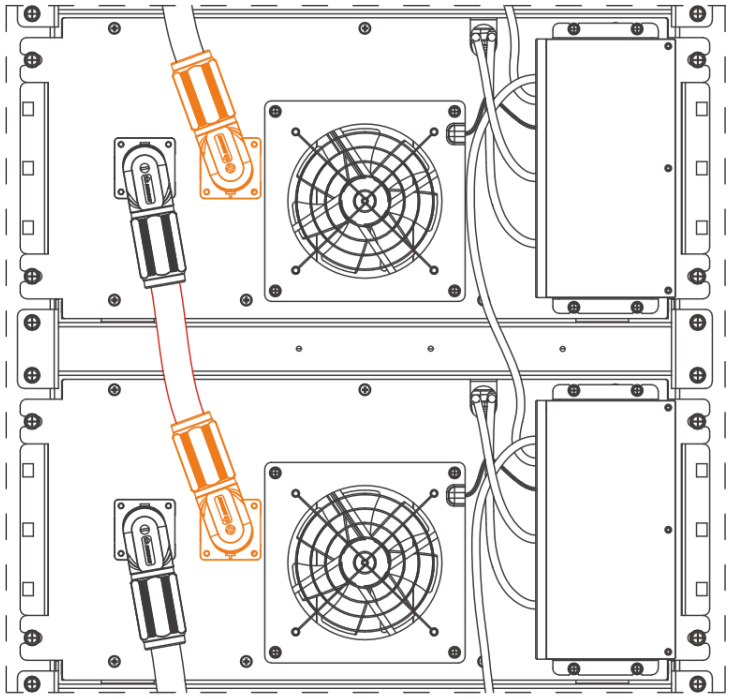

Figure 2.13

(2) Connect the battery box in column 2.

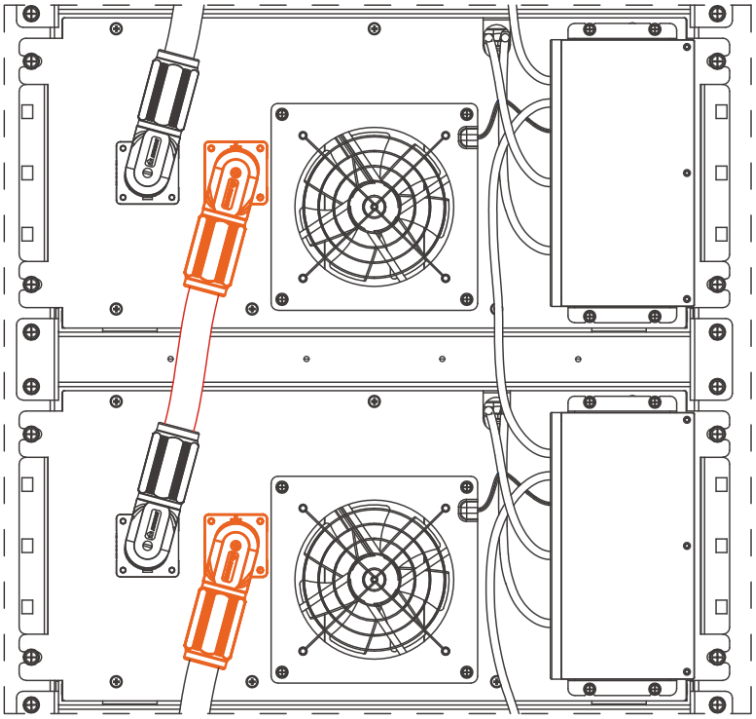

Figure 2.14

(3) Connect the fourth and fifth battery boxes between the columns.

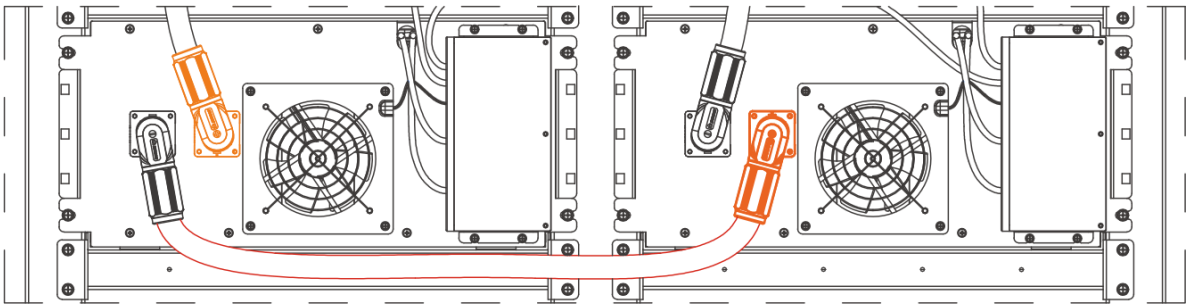

Figure 2.15

(4) Connect the main control box B- with the battery total.

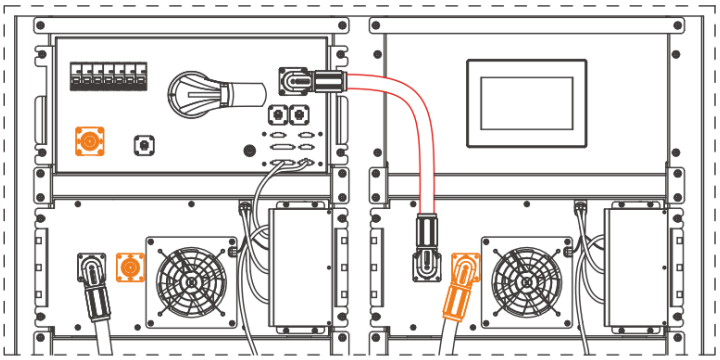

Figure 2.16

(5) Connect the main control box B+ with the battery total+.

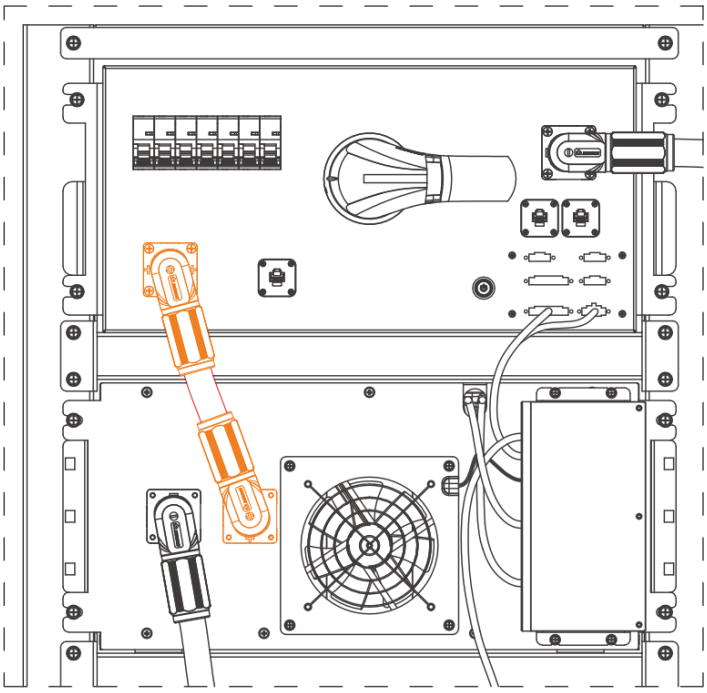

Figure 2.17

(6) Connect the main control box P+/P- with PCS battery circuit breaker (Battery input) +/- respectively, and the cable section shall not be less than 95mm2.

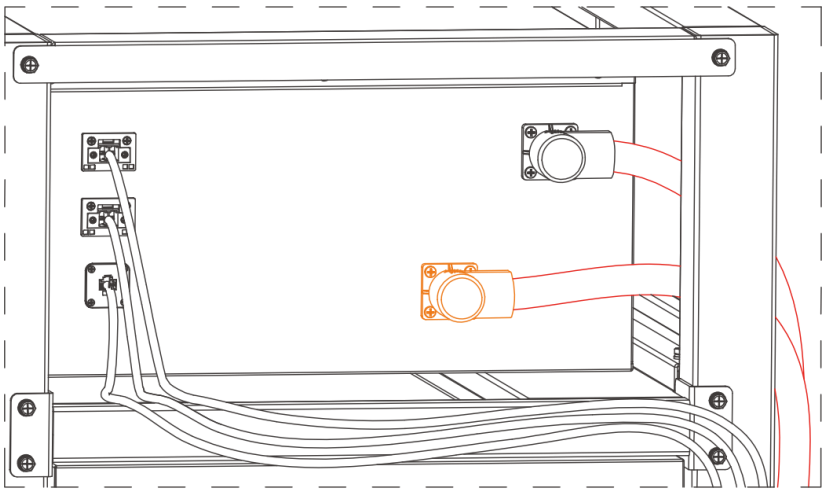

Figure 2.18

(7) Install the cover plate after the cables are connected.

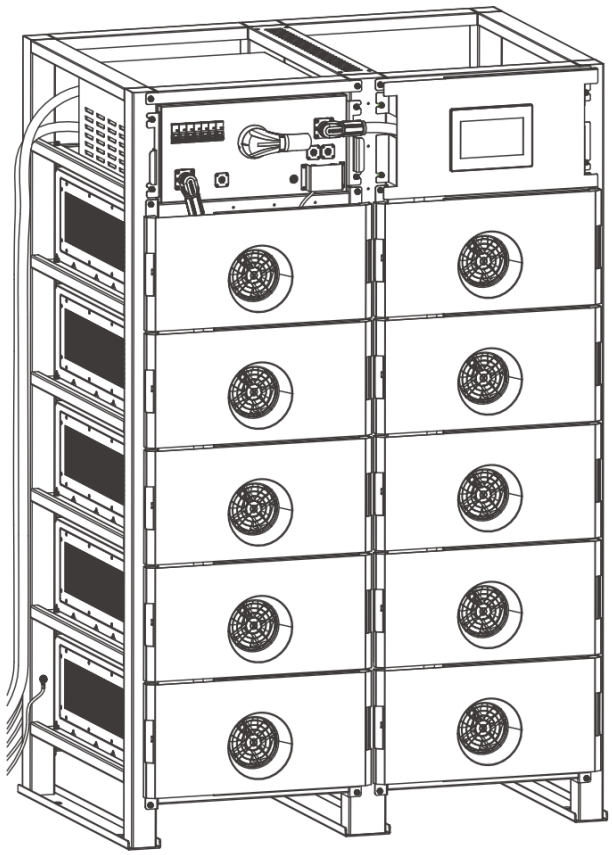

Figure 2.19 Overall diagram

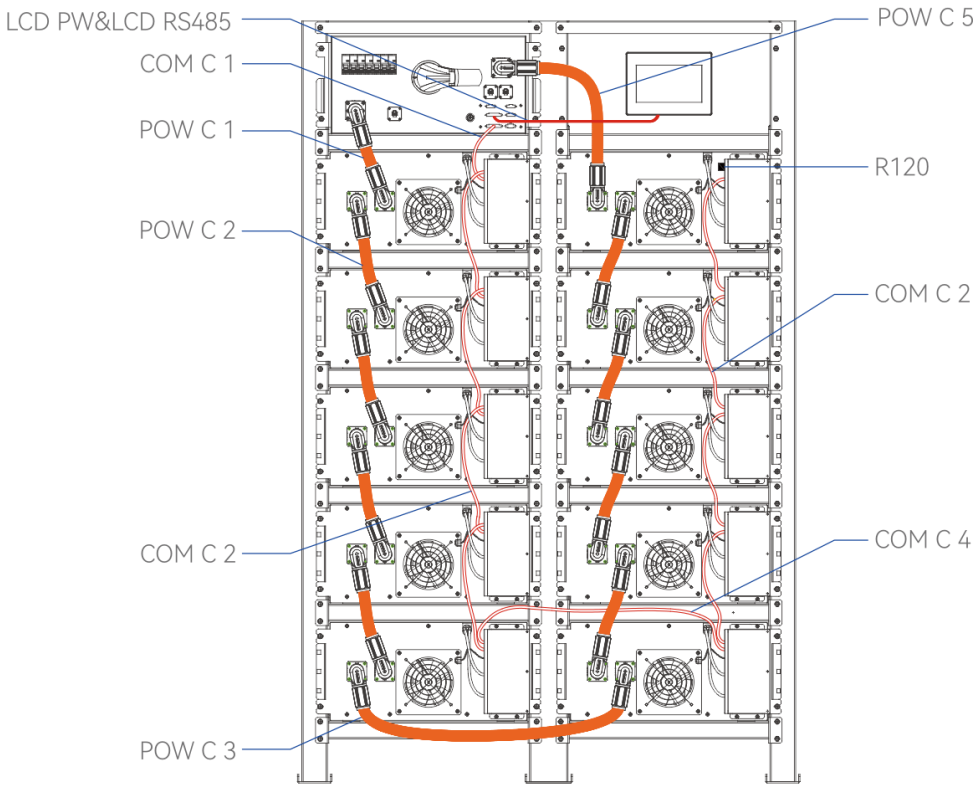

Wiring diagram

2.5 Check After Installation

No	Name	Description
1	The rack is installed firmly	The rack is installed firmly, and will not tip over due to vibration.
2	The cables are well arranged	The cable arrangement is reasonable and meets the user requirements.
3	The cables are clearly marked	Both ends of the cable need to be marked, and the markings are simple and easy to understand.
4	The cable tie is well arranged	The cable tie shall be even, and no sharp corners at the shear.
5	Cables are connected firmly	The connecting cables between the batteries are fixed, and the screw fastening needs to ensure that the spring washer is flattened.
6	Reliable grounding	The resistance between the rack ground wire and the machine room ground bar is less than 0.1Ω.
7	The battery cable is connected correctly	The polarity of the battery cluster and inverter connection ends is correct.